THERMOROSSI

*Fire Lovers*

# PQUADRO11 EVO6

ITA - MANUALE DI INSTALLAZIONE, USO E MANUTENZIONE.
FRA - MANUEL D'INSTALLATION, D'UTILISATION ET ENTRETIEN.
ENG - INSTALLATION, USE AND MAINTENANCE GUIDE.
DEU - INSTALLATIONS, BETRIEBS UND WARTUNGSANLEITUNG.
ESP - MANUAL DE INSTALACIÓN USO Y MANTENIMIENTO.
NL - HANDLEIDING VOOR INSTALLATIE, GEBRUIK EN ONDERHOUD.

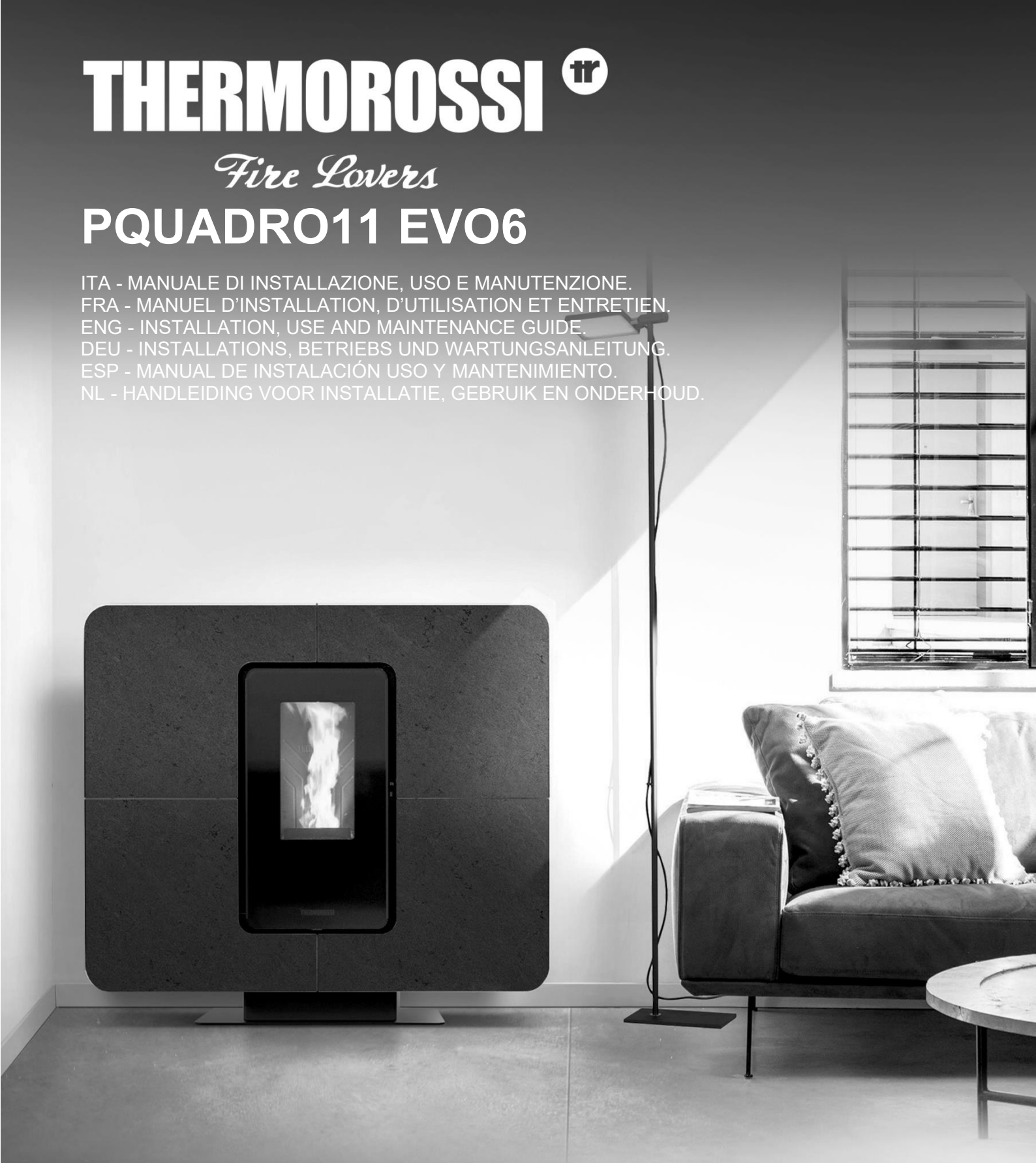

ITA - Informazioni importanti per la sicurezza ed il corretto funzionamento.
FRA - A lire impérativement ! Informations importantes pour la sécurité et le bon fonctionnement.
ENG - Must read! Important information for safety and correct operation.
DEU - Unbedingt lesen! Wichtige informationen zur sicherheit und zum sicheren betrieb.
ESP - ¡Leer! Informaciones importantes para la seguridad y el correcto funcionamiento.
NL - Belangrijke informatie voor de veiligheid en correcte werking.

## INDEX

**1 – INTRODUCTION ..... 5**
**2 – TECHNICAL CHARACTERISTICS ..... 7**
**3 – GENERAL DESCRIPTION ..... 8**
**4 – INSTALLATION ..... 9**
**5 – DESCRIPTION OF THE CONTROLS ..... 13**
**6 – USE OF THE APPLIANCE ..... 19**
**7 – ADDITIONAL ROOM TEMPERATURE THERMOSTAT / ADDITIONAL CHRONOTHERMOSTAT - MODEM ..... 20**
**8 – CLEANING AND MAINTENANCE ..... 22**
**9 – SMOKE DISCHARGE TUBE AND VENTILATION OF THE ROOMS ..... 26**
**10 – ALARMS ..... 29**
**11 – ELECTRICAL WIRING ..... 30**
**12 – INFORMATION FOR THE SKILLED TECHNICIAN ..... 31**
**13 – CONDITIONS OF WARRANTY ..... 33**

# EU Declaration of Conformity (DoC) / Dichiarazione di Conformità UE (DoC)

| | | | |
|---|---|---|---|
| **Company name:**<br>**Azienda:** | **THERMOROSSI S.P.A.** | **Postal address:**<br>**Indirizzo:** | **VIA GRUMOLO, N° 4** |
| Postcode and city:<br>Codice postale e città: | **36011 ARSIERO (VI)** | Telephone number:<br>Numero di telefono: | **0445/741310** |
| E-mail address:<br>Indirizzo e-mail: | **INFO@THERMOROSSI.IT** | | |

declare that the DoC is issued under our sole responsibility and belongs to the following product:
dichiara che la dichiarazione viene rilasciata sotto la propria responsabilità e si riferisce al seguente prodotto:

| | | | |
|---|---|---|---|
| **Apparatus model / Product:**<br>**Descrizione prodotto:** | Stufa a pellet<br>Pellet stove | **Trademark:**<br>**Marchio:** | **THERMOROSSI** |
| **Model:**<br>**Modello:** | **PQUADRO11 EVO6** | | |

The object of the declaration described above is in conformity with the relevant Union harmonisation legislation:
L'oggetto della dichiarazione di cui sopra è conforme alla pertinente normativa di armonizzazione dell'Unione:

- **Direttiva 2014/30/UE, EMCD**
- **Direttiva 2014/35/UE, LVD**
- **Direttiva 2011/65/UE, RoHS**
- **2014/30/EU Directive, EMCD**
- **2014/35/EU Directive, LVD**
- **2011/65/EU Directive, RoHS**

Sono state applicate le seguenti norme armonizzate e/o specifiche tecniche:
The following harmonised standards and/or technical specifications have been applied:

EN 55014-1
EN 55014-2
EN 61000-3-2
EN 61000-3-3

EN 60335-1
EN 60335-2-102
EN 62233

EN 50581
Commission Regulation (EU) 2015/1185

Arsiero, 01/12/2025

Firma/Sign. THERMOROSSI S.P.A. Un Amministratore

| **THERMOROSSI** *DECLARATION OF PERFORMANCE IN ACCORDANCE WITH REGULATION (EU) 305/2011* | **n°A183** |
|---|---|
| 1 - Unique identification code of the product type: | PQUADRO11 EVO6 |
| 2 - Model, batch, series (Article 11, paragraph 4): | PQUADRO11 EVO6 |
| 3 - Intended uses of the construction product, in accordance with the relevant harmonised technical specification: | Domestic heating appliance, without water, powered by wood pellets |
| 4 - Registered name and address of the manufacturer (Art. 11, paragraph 5): | THERMOROSSI S.P.A. Via Grumolo, n° 4 36011 Arsiero (VI) Tel.0445/741310 |
| 5 - Name and address of the representative (Art. 12, paragraph 2): | - |
| 6 - System for assessing and verifying the constancy of performance of the construction product referred to in Annex V: | System 3 and 4 |
| 7 - Notified laboratory: | Kiwa Italia S.p.a. N° 0476 |
| Harmonised technical specification: | EN 16510-2-6 |
| Test report number according to system 3: | 0476-AoP-CPR-9014283 |
| 8 - Performances declared: | |
| **Essential features** | **Performance** |
| Fire resistance: | A1 |
| Minimum safety distances from combustible materials in millimetres: | |
| Back / Side / Front / Ceiling / Floor: | 200 / 200 / 2000 / 750 / 100 |
| Risk of fuel leakage: | Compliant |
| Surface temperature: | Compliant |
| Electrical safety: | Compliant |
| Accessibility and cleanliness: | Compliant |
| Emission of combustion products: | |
| at nominal power / at reduced power ($mg/m^3$ at 13% $O_2$): | 134 / 620 |
| Maximum operating pressure: | N.A. |
| Flue gas temperature at nominal power (°C): | 147°C |
| Mechanical strength (to support the chimney/fuel): | Compliant |
| Nominal thermal power (kW): | 10,3 |
| Heat output to the environment (kW): | 10,3 |
| Heat output transferred to water (kW): | - |
| Energy efficiency at nominal heat output: | 92 |
| Energy efficiency at reduced heat output: | 92 |
| 9 - The performance of the product referred to in points 1 and 2 complies with the declared performance referred to in point 8. | |
| This declaration of performance is issued under the sole responsibility of the manufacturer referred to in point 4. | |
| Arsiero, 01/12/2025 | Signature: THERMOROSSI S.P.A. Un Amministratore |

| **IT – SCHEDA PRODOTTO (UE 2015/1186)**<br>**EN – PRODUCT FICHE (EU 2015/1186)**<br>**FR – FICHE PRODUIT (UE 2015/1186)**<br>**NL – PRODUCTGEGEVENSBLAD (EU 2015/1186)**<br>**DE – PRODUKTDATENBLATT (EU 2015/1186)**<br>**ES – FICHA DE PRODUCTO (UE 2015/1186)** | IT – MARCHIO<br>EN – BRAND<br>FR – MARQUE<br>NL – MERK<br>DE – MARKE<br>ES – MARCA | **THERMOROSSI S.P.A.** |
|---|---|---|
| IT – MODELLO<br>EN – MODEL<br>FR – MODÈLE<br>NL – MODEL<br>DE – MODELL<br>ES – MODELO | | **PQUADRO11 EVO6** |
| IT – CLASSE DI EFFICIENZA ENERGETICA<br>EN – ENERGY EFFICIENCY CLASS<br>FR – CLASSE D'EFFICACITÉ ÉNERGÉTIQUE<br>NL – ENERGIE EFFICIENTIEKLASSE<br>DE – ENERGIEEFFIZIENZKLASSE<br>ES – CLASE DE EFICIENCIA ENERGÉTICA | | **A +** |
| IT – POTENZA TERMICA DIRETTA<br>EN – DIRECT HEAT OUTPUT<br>FR – PUISSANCE THERMIQUE DIRECTE<br>NL – DIREKTE WARMTEAFGIFTE<br>DE – DIREKTE WÄRMELEISTUNG<br>ES – POTENCIA CALORÍFICA DIRECTA | | **10,3** |
| IT – POTENZA TERMICA INDIRETTA<br>EN – INDIRECT HEAT OUTPUT<br>FR – PUISSANCE THERMIQUE INDIRECTE<br>NL – INDIRECTE WARMTEAFGIFTE<br>DE – INDIREKTE WÄRMELEISTUNG<br>ES – POTENCIA CALORÍFICA INDIRECTA | | **-** |
| IT – INDICE DI EFFICIENZA ENERGETICA<br>EN – ENERGY EFFICIENCY INDEX<br>FR – INDICE D'EFFICACITÉ ÉNERGÉTIQUE<br>NL – ENERGIE-EFFICIENTIE-INDEX<br>DE – ENERGIEEFFIZIENZINDEX<br>ES – ÍNDICE DE EFICIENCIA ENERGÉTICA | | **122** |
| IT – EFFICIENZA UTILE ALLA POTENZA TERMICA NOMINALE<br>EN – USEFUL ENERGY EFFICIENCY AT NOMINAL HEAT OUTPUT<br>FR – RENDEMENT UTILE À LA PUISSANCE THERMIQUE NOMINALE<br>NL – NUTTIG RENDEMENT BIJ NOMINAAL VERMOGEN<br>DE – BRENNSTOFF-ENERGIEEFFIZIENZ BEI NENNWÄRMELEISTUNG<br>ES – EFICIENCIA ENERGÉTICA ÚTIL A POTENCIA CALORÍFICA NOMINAL | | **92** |
| IT – EFFICIENZA UTILE AL CARICO MINIMO<br>EN – USEFUL ENERGY EFFICIENCY AT MINIMUM LOAD<br>FR – RENDEMENT UTILE À LA CHARGE MINIMALE<br>NL – NUTTIG RENDEMENT BIJ MINIMALE WARMTEAFGIFTE<br>DE – BRENNSTOFF-ENERGIEEFFIZIENZ BEI MINDESTLAST<br>ES – EFICIENCIA ENERGÉTICA ÚTIL A CARGA MINIMA | | **92** |
| IT – RISPETTARE TUTTE LE ISTRUZIONI RIPORTATE SUL MANUALE DI INSTALLAZIONE USO E MANUTENZIONE<br>EN – ALWAYS FOLLOW THE INSTRUCTIONS PROVIDED IN THE OPERATING AND MAINTENANCE MANUAL<br>FR – RESPECTER TOUTES LES INSTRUCTIONS CITÉES DANS LA NOTICE D'INSTALLATION, UTILISATION ET ENTRETIEN<br>NL – VOLG ALTIJD DE INSTRUCTIES VAN DE INSTALLATIE-, GERUIKERSHANDLEIDING EN DE ONDERHOUDSVOORSCHRIFTEN<br>DE – ERFÜLLEN DIE ANWEISUNGEN DER INSTALLATION, NUTZUNG UND WARTUNG, DIE IN DER ANLEITUNGBUCH SIND<br>ES – RESPECTAR LAS INSTRUCCIONES REPORTADAS EN EL MANUAL DE UTILIZACIÓN Y MANTENIMENTO | | |

# 1 – INTRODUCTION

## 1.1 SAFETY GUIDELINES

This installation, use and maintenance manual is an integral and essential part of the product and must be kept by the user. Before commencing with the installation, use and maintenance of the product, carefully read this guide. All local, national and European regulations regarding the installation and use of the appliance must be met. The Manufacturer recommends carrying out all the maintenance operations described in this manual.
This appliance must only be used as intended by the manufacturer. Any other use is considered incorrect and therefore hazardous; consequently, the user shall be totally liable for the product if used improperly. Installation, maintenance and repairs must be carried out by professionally qualified personnel, certified according to Decree no. 37 of 22 January 2008 and in compliance with current regulations. In case of repairs only original spare parts supplied by the manufacturer must be used. Incorrect installation or poor maintenance can injure or damage people, animals or things; in this case the manufacturer shall be relieved of all responsibility.
Before beginning any cleaning or maintenance operation switch off the appliance by means of the 0/I main switch and disconnect the plug from the electrical power socket. The product must be installed in suitable locations and furnished with all the services (power and outlets) which the appliance requires for a correct and safe operation. Any repairs or actions carried out on any systems, components or internal parts of the appliance, or on any of the accessories supplied with it, that are not specifically authorised by Thermorossi S.p.A, will automatically void the warranty and the manufacturer's responsibility, pursuant to Italian Decree no. 224 of the President of the Republic of 24/05/1988, art. 6/b.
It is recommended to keep this manual in a safe place that is easily accessible to all users; if the manual is lost or deteriorated contact the manufacturer for a replacement copy. If the appliance is sold or transferred to another user ensure that the manual is handed over with it. The images and figures featured in this manual are purely illustrative and may differ from the actual product. Furthermore, Thermorossi reserves the right to apply changes to the content of this manual anytime and without notice.

*Thermorossi S.p.A. retains copyright on this manual. These instructions may not be reproduced or communicated to third parties or used in any other way without the necessary authorisation.*

## 1.2 SAFETY STANDARDS



**PERSONAL INJURY**
**This safety symbol identifies important messages throughout the manual. Read the information marked by this symbol carefully as non-observance of this message can cause serious injury to persons using the appliance.**



**DAMAGE TO PROPERTY**
**This safety symbol identifies messages or instructions that are fundamental for the appliance and system to function well. To avoid serious damage to the appliance, adhere strictly to these instructions.**



**INFORMATION**
**This symbol indicates important instructions for good functioning of the appliance. If this information is not correctly observed, the performance of the appliance will not be satisfactory.**

## 1.3 RECOMMENDATIONS



Read this entire use and maintenance manual carefully before using the appliance as familiarity with the information and instructions contained in it are essential for the correct use of the appliance.
No responsibility will be accepted for damages, even to third parties, if the instructions for installation, use and maintenance of the appliance are not followed scrupulously. Modifications made to the appliance by the user or on his behalf, must be considered to be under his complete responsibility. The user is responsible for all the operations required for the maintenance of the appliance before and during its use.

## 1.4 GENERAL GUIDELINES



Attention: the appliance must be connected to a system provided with a PE conductor (in compliance with the specifications concerning low voltage equipment). Before installing the appliance check the efficiency of the earth circuit of the power supply system.

Attention: the power supply line must have a section which is suitable for the power of the equipment. The cable section must in any case be no less than 1.5 mm². The appliance requires powering with a voltage of 230V and 50 Hz. Voltage variations greater than 10% of the nominal value can cause irregular operation or damage the electrical device. Position the appliance so that the electric power outlet in the room is easily accessible. Ensure that a suitable differential switch is installed upstream from the equipment.
Position the power supply cable in order to prevent any contact of the latter with the smoke exhaust pipe or hot parts of the appliance. If the power cord is damaged it must be replaced by the manufacturer or by an authorised technical assistance service in order to avoid risks.
Your appliance has obtained the CE marking and has been made to run for 1 hour to check that it functions correctly.
The product must not be used by children under the age of 8 years, by persons with physical, mental or sensorial impairments, or by persons who are not familiar with the instructions for use and maintenance of the product (the instructions are found in this booklet). Children must not play with the appliance.

ATTENTION: before every use make sure that the burner is clean and positioned correctly in its seat, check that the ash pan is clean and that the firebox door is firmly closed and tight.

ATTENTION: the door must always remain shut tight when the appliance is operating. It is strictly forbidden to open the door while the appliance is in operation. During operation, the smoke exhaust pipes, door, handles and some parts of the appliance may reach extremely high temperatures: be careful not to touch them and also educate children to be aware of said risks. Do not expose your body to hot air for long, do not overheat the room in which the appliance is installed, as these actions could cause health problems. Do not expose plants or animals directly to the hot air flow as this could have noxious effects on them. It is strictly prohibited to use any type of fuel (liquid, solid, ...) to light up the appliance: lighting must occur automatically as intended and described in this installation, use and maintenance booklet; consequently, it is also strictly forbidden to feed pellets (or any other material) into the brazier. Do not place non-heat resistant or inflammable or combustible objects in the vicinity of the appliance: keep them at a suitable distance. Do not place wet clothing to dry on the appliance. When using a clothes horse, keep at a suitable distance. It is strictly prohibited to disconnect the appliance from the electrical power mains while it is in operation.



Warning: do not wet the appliance and do not touch the electrical parts with wet hands. Never vacuum hot ash: this could damage the vacuum device. All the cleaning operations described in this manual must be carried out when the appliance is cold and shut off.



Attention! Warning for Swiss users
Refer to the local cantonal regulations imposed by the Fire Department (Mandatory signalling and safety distances) and the Note concerning installation of heaters issued by the Association of Cantonal Fire Agencies (VKF - AEAI).



ATTENTION: it is mandatory to earth the appliance. If this instruction is not observed serious damage, which is not covered by warranty, will result to the body of the appliance. Have an electrician check the earthing. There must be no electric potential (Volt) between the earth of the generator and the actual earth of the system.

### 1.5 TRANSPORTATION AND STORAGE

TRANSPORTATION AND HANDLING
The appliance body must always be in a vertical position when handled and exclusively by means of trolleys. Take special care to protect the electric panel and all the fragile parts from mechanical impact which could damage them and their correct functioning.

STORAGE
The appliance must be stored in a humid-free environment and sheltered from the weather; avoid placing the appliance directly on the ground. The Company denies all responsibility for damage caused to wood floors or floors made from any other material.
It is inadvisable to store the product for long periods of time.

### 1.6 GUIDELINES FOR CORRECT DISPOSAL OF THE PRODUCT



At the end of the product's useful life, it must be disposed of in compliance with applicable regulations and in respect of the environment, not with urban waste. The product must be consigned to designated sorted waste collection centres for the disposal of electronic waste authorised by the local municipal councils. Correct disposal not only helps safeguard the environment but it also promotes recovery and recycling of the materials.

## 2 – TECHNICAL CHARACTERISTICS

| | PARAMETER | UNIT | PQUADRO11 EVO6 |
|---|---|---|---|
| Firebox Power** | **Pfoc** | kW | 11,1 |
| Nominal heat output** | **Pnom** | kW | 10,3 |
| Heat output to the environment ** | **PSHnom** | kW | 10,3 |
| Water heat output** | **PWnom** | kW | - |
| Heat output at part load** | **Part** | kW | 2,8 |
| Heat output to the environment at partial load ** | **PSHpart** | kW | 2,8 |
| Water heat output at partial load** | **PWpart** | kW | - |
| Efficiency at rated thermal output** | **ηnom** | % | 92 |
| Efficiency with thermal power at partial load** | **ηpart** | % | 92 |
| Rated power consumption** | **-** | Kg/h | 2,3 |
| Reduced power consumption** | **-** | Kg/h | 0,7 |
| Tank capacity | **-** | Kg | 18 |
| Seasonal efficiency at nominal power | **ηS** | % | 82 |
| Energy efficiency index | **EEI** | - | 123 |
| CO emissions with 13% $O_2$ at rated power** | **COnom (13%$O_2$)** | mg/m³ | 134 |
| CO emissions with 13% $O_2$ at partial load** | **COpart (13%$O_2$)** | mg/m³ | 620 |
| NOx emissions with 13% $O_2$ at rated power** | **NOxnom (13%$O_2$)** | mg/m³ | 85 |
| NOx emissions with 13% $O_2$ at partial load** | **NOxpart (13%$O_2$)** | mg/m³ | 104 |
| OGC emissions with 13% $O_2$ at rated power** | **OGCnom (13%$O_2$)** | mg/m³ | 8 |
| OGC emissions with 13% $O_2$ at partial load** | **OGCpart (13%$O_2$)** | mg/m³ | 24 |
| Particulate emissions with 13% $O_2$ at rated power** | **PMnom (13%$O_2$)** | mg/m³ | 9 |
| Particulate emissions with 13% $O_2$ at partial load** | **PMpart (13%$O_2$)** | mg/m³ | 33 |
| Minimum chimney draught at rated power | **pnom** | Pa | 12 |
| Minimum chimney draught at partial load | **ppart** | Pa | 12 |
| Maximum permissible working pressure of water | **pW** | bar | - |
| Water content of the appliance | | l | - |
| Minimum safety distances from combustible materials | **dR** | mm | 200 |
| 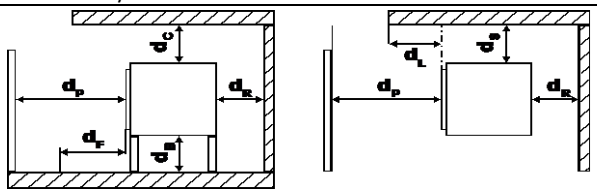 | **dS** | mm | 200 |
| | **dC** | mm | 750 |
| | **dP** | mm | 2000 |
| | **dF** | mm | 1500 |
| | **dL** | mm | 1500 |
| | **dB** | mm | 100 |
| Minimum distances from non-combustible walls | **dnon** | mm | 50 |
| Electricity consumption in standby mode | **elSB** | kW | 0,004 |
| Electricity consumption at rated power | **elmax** | kW | 0,102 |
| Electricity Consumption at partial load | **elmin** | kW | 0,04 |
| Supply voltage, frequency | **E, f** | V, Hz | 230 - 50 |
| Maximum electrical power consumption | **Vmax** | W | 397W |
| Exhaust gas temperature at rated power** | **Tsnom** | °C | 147 |
| Partial load exhaust gas outlet temperature** | **Tspart** | °C | 78 |
| Chimney designation | **Tclass** | - | T200G |
| Exhaust gas flow at rated power** | **φf,g nom** | g/s | 5,3 |
| Exhaust gas flow at partial load** | **φf,g part** | g/s | 3,9 |
| Continuous operation (CON) or intermittent operation (INT) | **CON o INT** | - | CON |
| Exhaust gas outlet diameter | **dout** | mm | 80 |
| Type of appliance | **TYPE** | - | TYPE CM50 |
| Air tightness loss | **Vh** | m³/h | 1,23 |
| Length, height, width | **L, H, W** | mm | 300, 993, 1109 |
| Unloaded weight | **m** | Kg | 160 |
| Maximum weight that the chimney can bear | **mchin** | Kg | 0 |
| Heatable volume* | | m³ | 278 |

**** All the data are based on the appliance fuelled with standards UNI EN 14961-2 A1 and A2 type-approved pellets.**

*** It is important to take into consideration the fact that the heatable volume is greatly influenced by the insulation of the house (energy class of the building) and by the position of the appliance in the planimetry of the house, therefore the indicated values may vary, even significantly.**

| Legenda | Key |
|---|---|
| CANALIZZAZIONE | CHANNELLING |
| USCITA FUMI | SMOKE OUTLET |
| PRESA ARIA | AIR INTAKE |

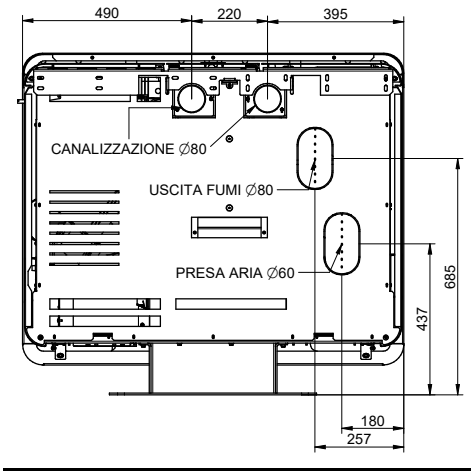


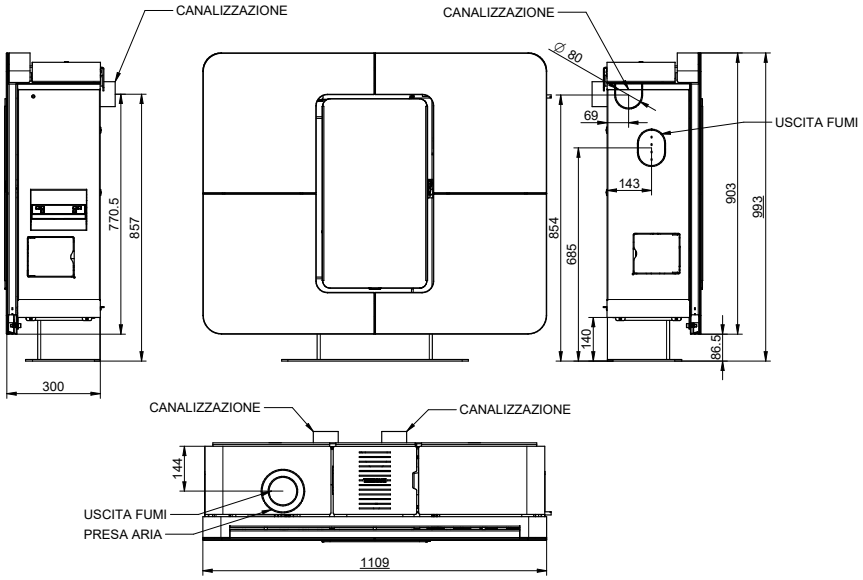


# 3 – GENERAL DESCRIPTION

## 3.1 OPERATING TECHNOLOGY

Your appliance has been built to fully satisfy all your heating and practical requirements. Top-grade components and functions managed with microprocessor technology guarantee high reliability and optimal performance.

## 3.2 THE PELLET

The appliance is fuelled by pellets, that is, cylinders of compressed sawdust; it his allows you to fully enjoy the heat of the flame without having to manually stoke the combustion.
The pellets have a 6 mm diameter and a length between 10 e 20 mm. They have a max moisture content of 8%; a thermal value of 4000/4500 Kcal/kg and density of 630-640 kg/m³. It must be approved according to UNI EN 14961-2 A1 A2.
**It is strictly forbidden to use any pellet type other than that specified above. The use of fuel that does not comply with the above specifications not only immediately invalidates the warranty for the appliance but can also create dangerous situations. Do not use the appliance as an incinerator, at the risk of voiding the warranty.**

## 3.3 PELLET REFUELLING

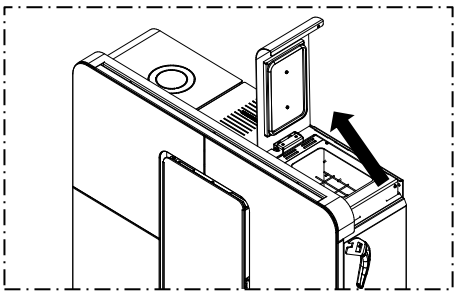

The feedbox is situated in the top part of the appliance. The load capacity specified in the technical data can vary according to the specific weight of the pellets.
Take special care when loading the tank as the screw feeder at its base is in motion. Take care when topping up with fuel as the loading area can get very hot.
ATTENTION: it is normal to find some pellets remaining in the tank even if the stove shuts off because the pellets have run out.

Attention: when filling up the tank, take care not to drop any pellets into the internal parts of the appliance, as, in extreme cases, this could generate live flames.
The manufacturer recommends emptying the tank and vacuuming the screw feeder zone once a month and during the summer period. If the screw feeder can be seen when loading the pellet in the tank (pellet almost exhausted in the tank), the appliance must be turned off, cooled down and the brazier must be cleaned. Do not switch off the appliance by means of the main switch O/I on the power panel or by cutting off the power supply. Then restart the appliance.

Should you notice an excessive stagnation of flue gas in the combustion chamber, move away from the appliance immediately. In particular move away from the glass door of the combustion chamber. The excessive concentration of unburned gases could create an explosion that could break the glass. Do not open the fuel feed door for any reason and do not go near the appliance until said gases have been exhausted. Contact a technical service centre to determine the causes. Do not switch off the appliance by means of the main switch O/I on the power panel or by cutting off the power supply. Do not turn on the appliance for any reason whatsoever following an event such as this.

**Only pellets complying with the above specifications are to be loaded into the tank; in no case whatsoever must foreign substances or objects be introduced into the tank, the brazier or any part of the generator.**

# 4 – INSTALLATION

## 4.1 APPLIANCE LOCATION

Follow the general guidelines set out in paragraph 1.1 to the letter. Keep in mind that the flooring of the room in which the appliance is to be installed must withstand the combined weight of the appliance and the pellets contained in the tank.

ATTENTION: the room where the appliance is installed must be well-ventilated and free from humidity and salty air. A high level of humidity or saltiness in the room can lead to the onset of rust or corrosion which will not be covered by warranty.

If inflammable materials are located in the vicinity of the appliance (e.g.: matchboarding, furniture, curtains, pictures and paintings, sofas) it is mandatory to comply with the minimum distances listed in the technical specifications table. Installation in the vicinity of heat-sensitive materials is only permitted if suitable insulating and fireproof protection is placed between the object and the appliance (ref. Uni 10683).

If the flooring is made of wood or any other combustible material, it is mandatory to install a fireproof floor protector plate between the appliance and the floor. Failure to observe this instruction will immediately invalidate the appliance warranty.

The installer must issue a certificate of conformity for the installation which includes the design plans and the following documents:

a) Report containing the type of materials utilised.
b) Project as defined in Article 5 of Ministerial Decree n° 37 22 January 2008.
c) Drawing of the finished installation.
d) References to existing partial or previous declarations of conformity (e.g. electrical wiring).
e) Copy of the certificate of recognition of the professional technical qualifications.

These documents must, by law, be kept together with the use and maintenance booklet. The customer is responsible for verifying, directly or indirectly, that the installation has been carried out to perfection in accordance with relevant regulations in force. Do not install the appliance in unsuitable rooms such as bedrooms, bathrooms, garages and/or lock-ups. It is forbidden to place the appliance in environments with an explosive atmosphere.

ATTENTION, the stove is not simply a household appliance: if the instructions set out in this booklet are not followed and/or if installation of the appliance is not executed perfectly and/or the provisions in force are not strictly complied with, dangerous conditions could arise for both objects and persons. It is the user's responsibility to verify the presence, in the room, of a vent necessary for supplying oxygen to the generator.

## 4.2 UNPACKING THE APPLIANCE

To unpack the appliance, undo the screws (C) that fasten the base of the appliance to the pallet.

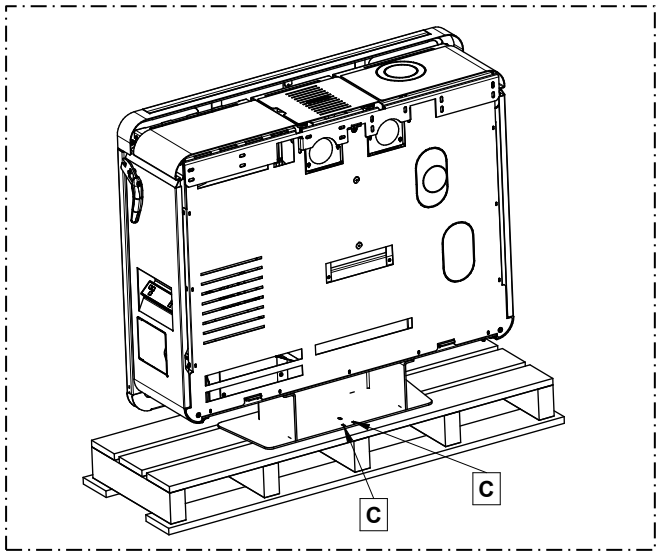

### 4.3 GLUING THE GLASS PANES TO THE FRONT PANEL

After unpacking the glass panes of the casing, disassemble the front panel as described below. Prior to beginning any operation, lay a soft sheet on the floor where you can place the front panel after removing it from the appliance, in order to prevent damaging the floor or scratching the paint on the panel.

• Open the cover of the pellet tank.
• Pull upwards to remove the cover (A).
• Undo the screws (D).
• Remove the front panel by detaching it from the body of the appliance.
• Lay the front panel on the sheet on the floor.

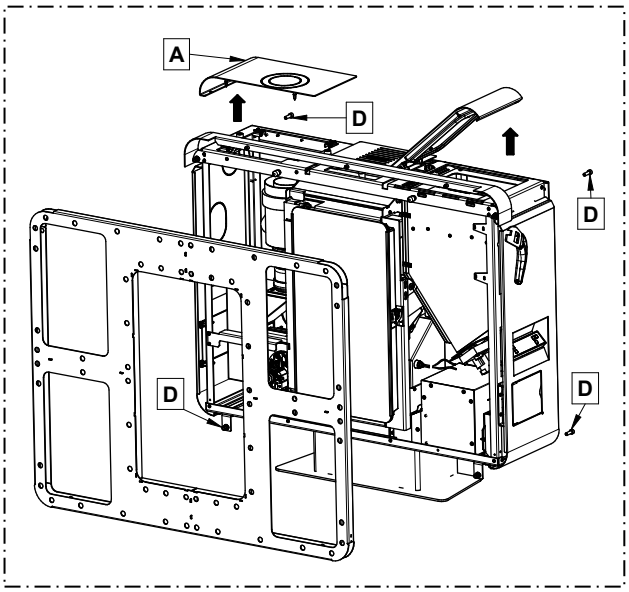


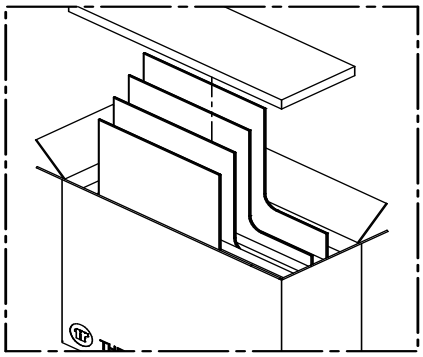

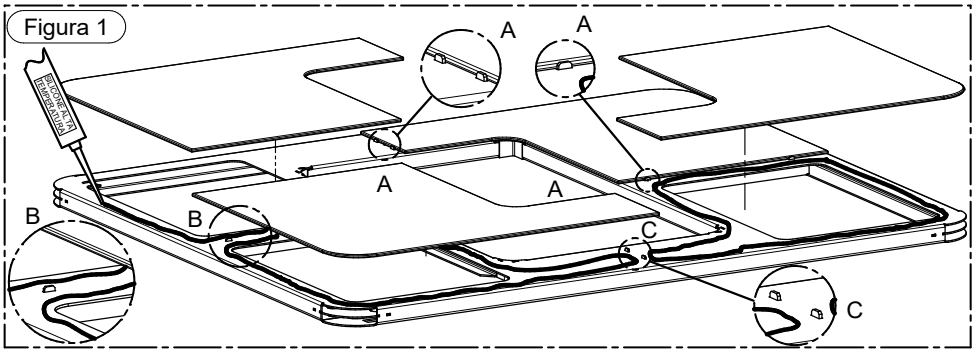


To glue the panes to the front panel, firstly apply silicone to the surface of the panel as illustrated in Figure 1. Attention: as highlighted in detail C, do not apply silicone to the areas where the corners of the glass cross over. If applied here the silicone could leak out and ruin the look of the product.
Position each glass pane by placing it in an inclined position and using the locators A indicated in Figure 1. When the edges of the glass about the locators A, delicately place the entire surface of the pane with the applied silicone and exert uniform pressure with your hands over the whole surface, while making sure that the pane remains aligned in position. Repeat this procedure for all the glass panes.
After checking that the panes are aligned with each other and with the front panel secure them in position by applying strips of paper tape along the edges.
Wait at least 24h for the silicone to cure before handling the front panel. If the room temperature drops below 18°, wait at least 48 hours for the silicone to cure completely.

**ATTENTION**: use mono-component acetic-reticulation silicone suitable for high temperatures (min. 200°C, max. 300°C).

### 4.4 CONNECTING THE APPLIANCE TO THE FLUE OUTLET

**Connection of the appliance to the flue outlet must be carried out in strict compliance with the instructions contained in this booklet (see dedicated chapter).**
The appliance is fitted with the possibility for venting on three sides: top left, side left and rear left (Figure 3).
Side or rear venting requires the use of a 90° elbow which is not supplied with the appliance.
Once you have decided on the venting option that you wish to use, remove the relevant pre-cut shape. For this operation it is recommended to use a blade for iron to prevent damaging the metal cover.

| Legenda | Key |
|---|---|
| SUPERIORE | TOP |
| LATERALE | SIDE |
| POSTERIORE | REAR |
| Figura | Figure |
| ALLINEAMENTO | ALIGNMENT |

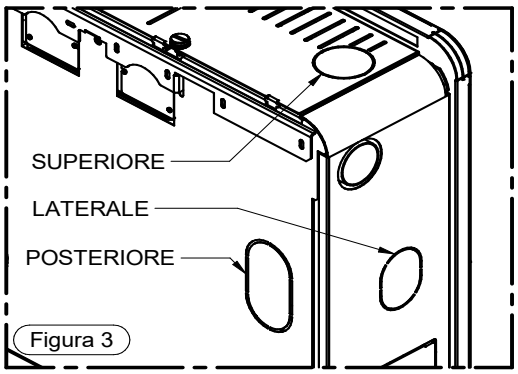

### 4.5 REMOUNTING THE FRONT PANEL

Once the appliance has been installed, the next step is to remount the front panel. Re-attach the front panel (G) to the body of the appliance and screw in the screws (D), previously removed (do not tighten them). After checking that the front panel is aligned with the door (see the alignment line in the drawing below) tighten the screws (D). Complete the assembly of the heater.

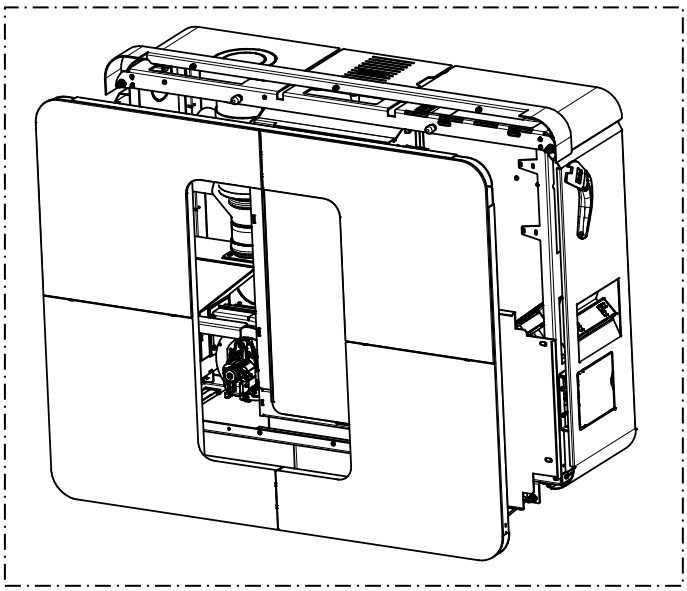

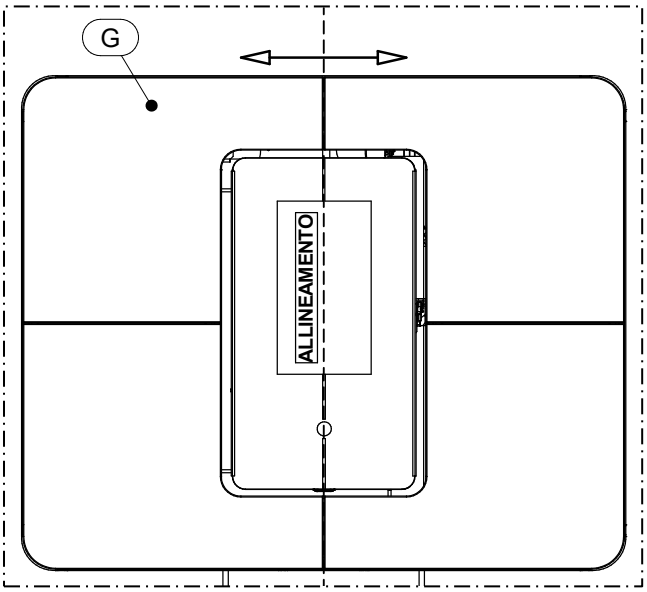


### 4.6 HANDLE

Your appliance is supplied with a handle for opening and closing the firebox door to facilitate cleaning (see dedicated paragraph). The handle is also designed to be used for regulating the channelling flow rate. When not in use, the handle can be stowed on the side of the appliance if the hook provided is attached to the appliance. (See figures below).
To mount the hook, remove the right-side panel (1) of the appliance by undoing the two screws (4), position the hook (2) in the hole and lock it with the nut (3). Finally replace the side panel (1).

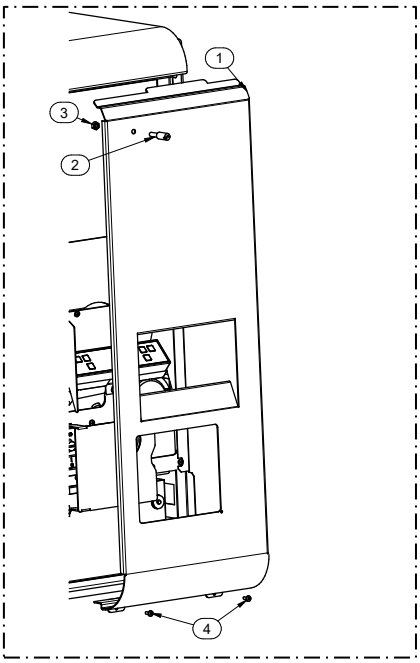


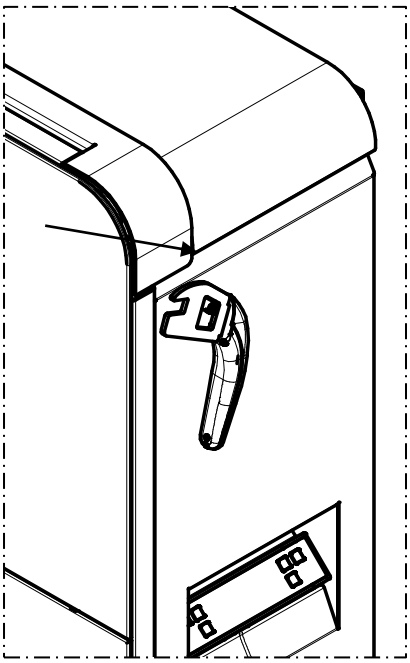

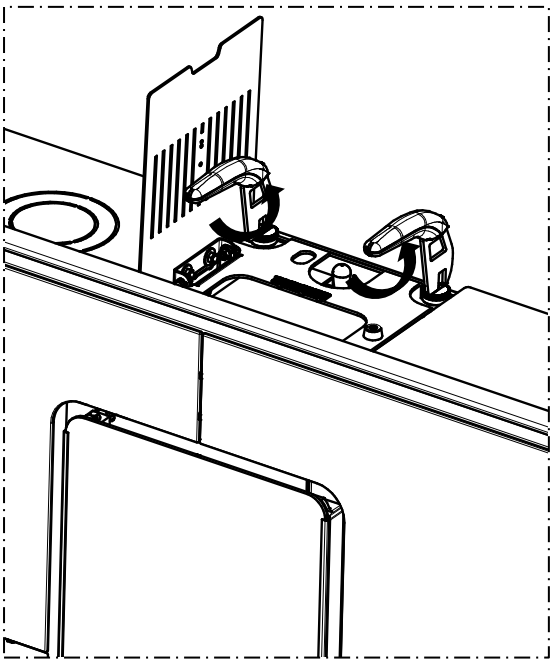

### 4.7 WALL MOUNT INSTALLATION

The appliance is supplied standard with a wall mount bracket.
To install the product on the wall, remove the bracket (A) by undoing the two screws (B) which can be accessed by lifting the door (C).

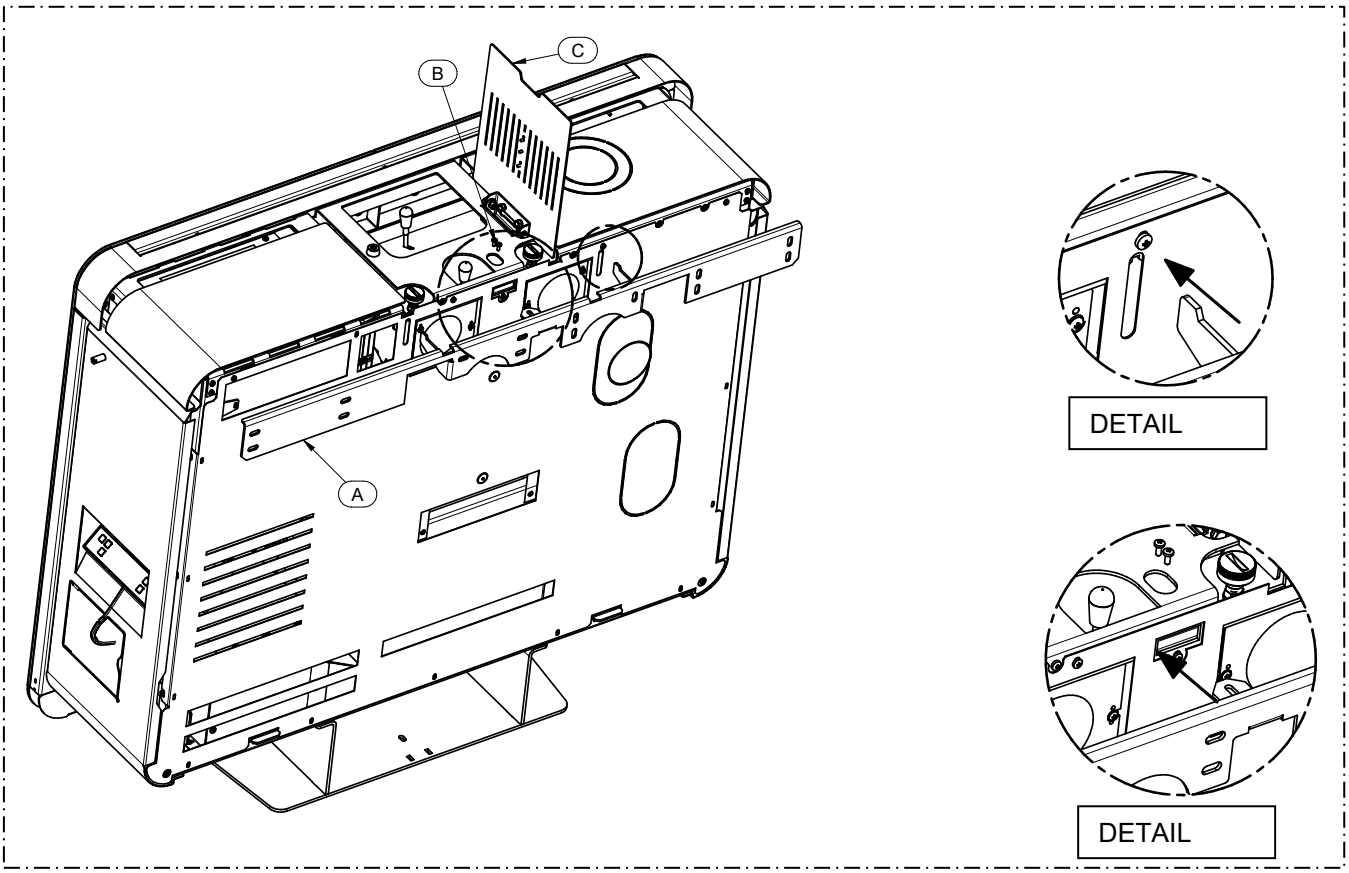


| Legenda | Key |
|---|---|
| CANALIZZAZIONE | CHANNELLING |
| USCITA FUMI | SMOKE OUTLET |
| PRESA ARIA | AIR INTAKE |

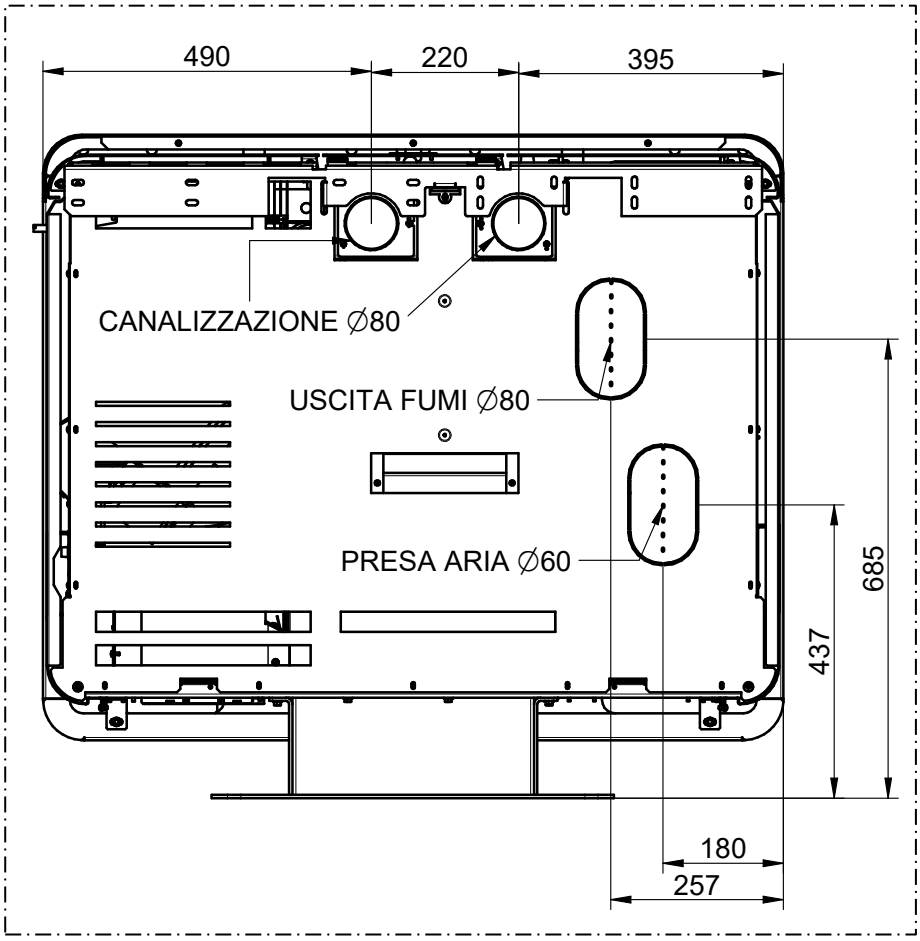

Fix the bracket on the wall and hang the unit on the wall bracket; it is recommended to push it firmly against the wall and tighten the fixing screws B. When carrying out this operation, take care to match up the support hooks (See details in the figure above).
Once you have completed this operation, remove the base by undoing the 4 screws that fix it to the structure of the appliance. It is recommended to tighten the screws in the appliance once the base has been removed.

ATTENTION: considering the weight of the appliance, it is recommended to use anchor bolts suitable for the type of support to which the appliance is mounted. Make sure that the support can easily sustain the whole weight of the appliance.

ATTENTION: make sure that the wall plaster and finish can resist an operating temperature of at least 80°C. Given the working temperatures of the appliance it is normal for the wall to blacken, particularly if it is a light colour, after a season of operation.

### 4.8 DRAWING COMBUSTION AIR FROM OUTSIDE

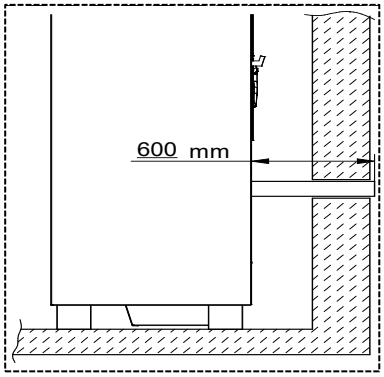


The appliance is fitted with an intake to enable drawing in the combustion air directly from outside the building. Connect the air intake on the appliance to the exterior of the building with suitable piping, capable of resisting high temperatures. The pipe's length must be maximum 600 mm.

**ATTENTION:** the suction duct must be protected with a grid and never be clogged. The protection grid, if installed, must be inspected and cleaned on a monthly basis. Moreover, a suitable windbreak fitting must be installed in the duct's terminal.

## 5 – DESCRIPTION OF THE CONTROLS

The appliance, when operating, could be hot to the touch, particularly the door of the combustion chamber: take care when handling the appliance components. Your appliance has obtained the CE marking and has been made to run for at least one hour to check that it functions correctly. The product must not be used by children, by persons with physical or mental impairments, by persons who are not familiar with the instructions for use and maintenance of the product (the instructions are found in this use and maintenance booklet).
ATTENTION: before each use make sure that the burner is clean and positioned correctly in its lodging.
ATTENTION: the door must always remain shut tight when the appliance is operating. It is strictly forbidden to open the door while the appliance is in operation. While the appliance is in operation the smoke exhaust pipes can reach extremely high temperatures: do not touch them! It is strictly prohibited to use any type of fuel (liquid, solid...) other than pallet to light up the appliance: lighting must occur automatically as intended and described in this installation, use and maintenance booklet; consequently, it is also strictly forbidden to feed pellets (or any other material) into the brazier. Do not place non-heat resistant or inflammable or combustible objects in the vicinity of the appliance: keep them at a suitable distance. Do not place wet clothing to dry on the appliance. When using a clothes horse, keep at a suitable distance. It is strictly prohibited to disconnect the appliance from the electrical power mains during normal operation.

### 5.1 DESCRIPTION OF THE CONTROL PANEL

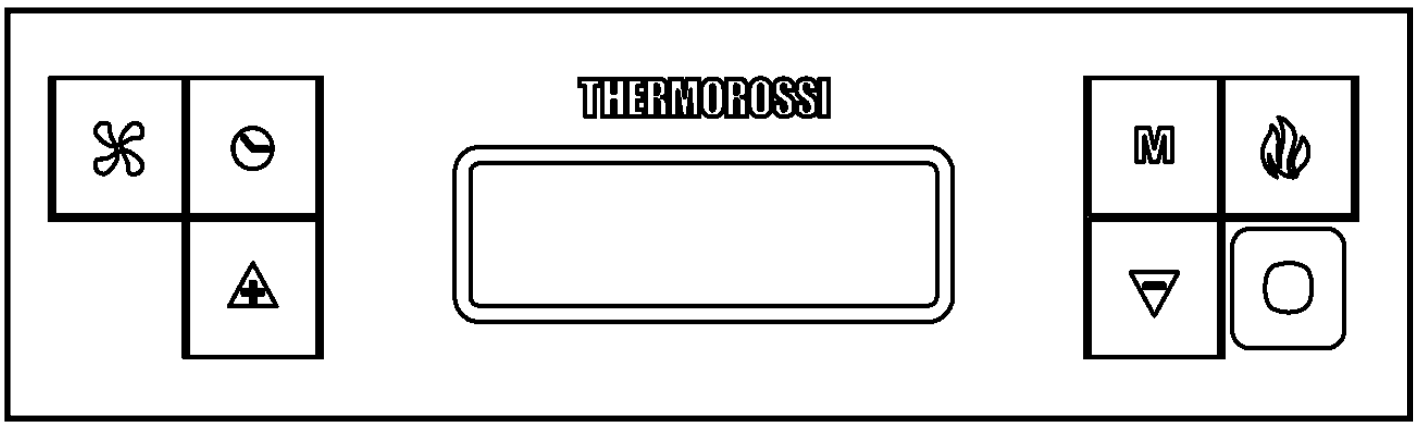

The control panel is managed by a microprocessor. The control buttons and the various displays are described below.
The control buttons are:



*Clock button*
Press this button to activate / deactivate the programming. (See dedicated paragraph).



*Ventilation button*
Press this button to set the desired level of ventilation: Six ventilation levels can be set on this stove. The fan starts operating as soon as the temperature inside the stove body rises and the smoke thermocouple gives the signal. The fan stops automatically when the stove body has cooled sufficiently. The fan cannot be disabled during operation.



Flame button
Pressing this button when the appliance is off activates the **START** sequence, sets the power of combustion in the **WORK** mode or shuts off the appliance by activating the **OFF** sequence.



*Scroll buttons (only in the Menu)*
Press MINUS key to lower the value. Press PLUS key to raise the pre-set value.



*Menu button*
Press this button to access the main menu. You can scroll the setting screens shown below, which will be described in detail in the following paragraphs. To access the functions of each subwindow, wait a few seconds.

| | |
|---|---|
| **DATE** | This button is used to set the day of the week, the hour and minutes. |
| **CRONO** | This button is used to set the programmed on and off sequences. |
| **LEVEL** | Is used to change the rotation speed of the smoke suction unit. |
| **THERMOCOMFORT** | This button is used to activate the connection with the Room Control device (Optional). |
| **SHOW CRONO** | This button is used to view the parameters programmed with the CRONO function. |

*Display*
The following information can appear on the display:






Displays the pre-set **combustion power**, and consequently the pellet consumption**,** by the number of bars that are lit up around the flame symbol, using this logic:

| | |
|---|---|
| **One bar lit:** | Minimum combustion power (and therefore with minimum pellet consumption) |
| **Two bars lit:** | Second combustion power |
| **Three bars lit:** | Third combustion power |
| **Four bars lit:** | Fourth combustion power |
| **Five bars lit:** | Maximum combustion power (and therefore with maximum pellet consumption) |
| **No bars lit:** | The appliance is OFF |

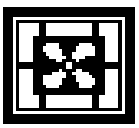

Displays the pre-set **ventilation power**, and consequently the room fan speed**,** by the number of bars that are lit up around the fan symbol, using this logic:

| | |
|---|---|
| **One bar lit:** | Minimum ventilation power |
| **Two bars lit:** | Second ventilation power |
| **Three bars lit:** | Third ventilation power |
| **Four bars lit:** | Fourth ventilation power |
| **Five bars lit:** | Fifth ventilation power |
| **Six bars lit**: | Maximum ventilation power |




Dashes appear along the top of the display, and each dash corresponds to one day of the week set by the user (e.g., 1 corresponds to Monday, 2 correspond to Tuesday… etc.).
The operating status of the appliance appears below these dashes, that is START, OFF or WORK. And the current time set by the user appears below this word.

The presence in the display of the clock symbol indicates that the CRONO programming has been enabled; if this symbol does not appear it means that the CRONO programming has been disabled.

## 5.2 DESCRIPTION OF THE POWER PANEL

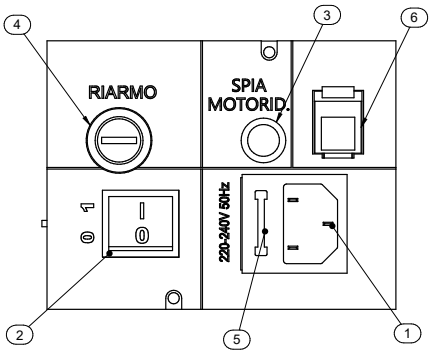


The components of the power board are described below:
1) Electrical power outlet 220V-240V 50Hz.
2) Main switch 0/I.
3) Test light for pellet feed motor.
The light comes on simultaneously with the activation of the pellet feed motor.
4) Cap for reset thermostat button.
If the reset thermostat overheats stop the pellet feeder. The appliance must cool down before you can restart the appliance. After verifying and eliminating the causes of the event, undo the protective cap and press the button.
5) Protection fuse 3.15 A.
6) Outlet RJ 45 to connect Wi-Fi module.

## 5.3 DATE: SETTING THE DATE AND TIME

| Legenda | Key |
|---|---|
| RIARMO | RESET |
| SPIA MOTORIDUTTORE | GEARMOTOR INDICATOR |

The appliance must be energised and the I/0 switch in position "1".
The current date and time can be set using the DATE function.

To set the current time and date proceed as follows:

1) Press the **Menu Button** once to view the following screen:

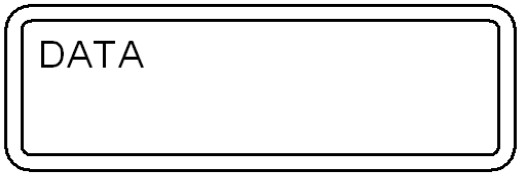


After a few seconds the following screen will appear on the display:

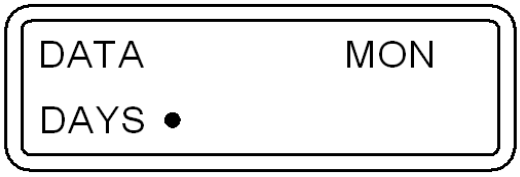


2) Now press the **Scroll Buttons** to change the day of the week; each dot corresponds to one day of the week (e.g., 1 corresponds to Monday, 2 correspond to Tuesday, etc...). To confirm the selection of the day of the week press the **Flame Button**.
Once confirmed, the selector shifts to the flashing hour section:

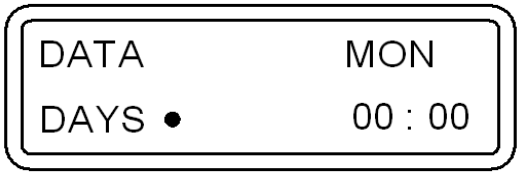


3) Press the **Scroll Buttons** to change the hour. Once you have set the hour confirm the value by pressing the **Flame Button.** Once confirmed, the selector shifts to the flashing minutes section. Press the **Scroll Buttons** to set the minutes. Press the **Flame button** to confirm.
Once confirmed, the date and time setting screen closes automatically and the initial screen returns to the display.

If you confirm the wrong value simply press the **Menu Button** to exit the box, the initial screen will appear, and repeat the procedure described above.

### 5.4 CHRONO: ON/OFF PROGRAMMING

The appliance must be energised and the I/0 switch in position "1".

The CRONO function allows you to set the weekly program by setting up to 3 on-off cycles at different times for every day from Monday through to Sunday.

To set a program follow the procedure described below:
1) Press the **Menu Button** twice quickly to view the following screen:

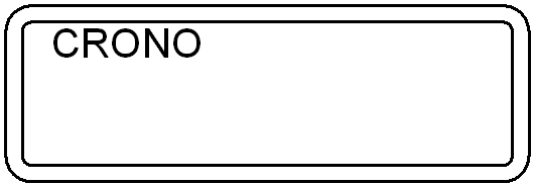


After a few seconds the following screen will appear on the display:

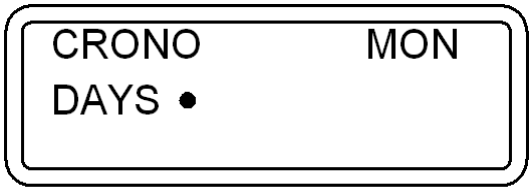


2) Press the **Scroll Buttons** to select the day of the week on which you want to set the program. Each dot corresponds to one day of the week (e.g., 1 corresponds to Monday, 2 correspond to Tuesday, etc...). To confirm the day of the week selected for the programming press the **Flame Button**. The following screen will appear with the hour section flashing:

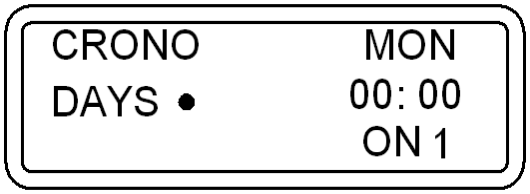


3) Now press the **Scroll Buttons** to select the hour at which you wish the appliance to start up automatically (ON1). Once the hour has been set, confirm the value by pressing the **Flame Button.**
Once confirmed, the selector shifts to the flashing minute section of ON1. Press the **Scroll Buttons** to set the minutes for the first start up. Confirm the value by pressing the **Flame Button**.

4) Now press the **Scroll Buttons** to select the hour at which you wish the appliance to shut off automatically (OFF1). Once the hour has been set, confirm the value by pressing the **Flame Button.**
Once confirmed, the selector shifts to the flashing minute section of OFF1. Press the **Scroll Buttons** to set the minutes for the first shut off. Confirm the value by pressing the **Flame Button**.

At this point the first ON/OFF cycle for the selected day has been set.
The following screen will appear:

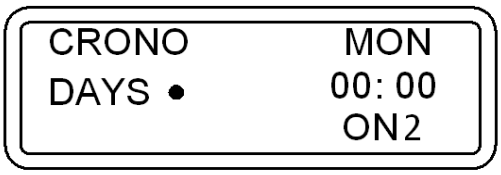


At this point if no further programming is required for that day go to point 5-A.
If, on the other hand, you wish to program a second ON/OFF cycle for that day go to point 5-B.

5-A) Press the **Menu Button** to exit the screen, in order to enable you to program the times for the ON/OFF cycles for the other days of the week. In this case repeat the instructions from point 2 up to this paragraph.

5-B) Press the **Scroll Buttons** to select the hour at which you wish the appliance to start up automatically for the second time (ON2). Once the hour has been set, confirm the value by pressing the **Flame Button.**
Once confirmed, the selector shifts to the minute section of ON2. Press the **Scroll Buttons** to set the minutes for the second start up. Confirm the value by pressing the **Flame Button**.
Now press the **Scroll Buttons** to select the hour at which you wish the appliance to shut off automatically (OFF2). Once the hour has been set, confirm the value by pressing the **Flame Button.**
Once confirmed, the selector shifts to the minute section of OFF2. Press the **Scroll Buttons** to set the minutes for the second shut off. Confirm the value by pressing the **Flame Button.**

At this point the second ON/OFF cycle for the selected day has been set.
The following screen will appear:

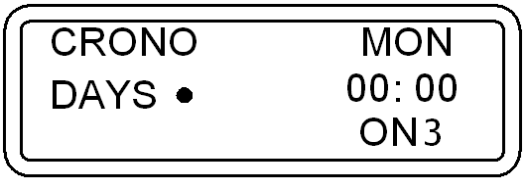


At this point if no further programming is required for that day go to point 6-A.
If, on the other hand, you wish to program a third ON/OFF cycle for that day go to point 6-B.

6-A) Press the **Menu Button** to exit the screen, in order to enable you to program the times for the ON/OFF cycles for the other days of the week. In this case repeat the instructions from point 2 up to this paragraph.

6-B) Press the **Scroll Buttons** to select the hour at which you wish the appliance to start up automatically for the third time (ON3). Once you have set the hour confirm the value by pressing the **Flame Button.**
Once confirmed, the selector shifts to the minute section of ON3. Press the **Scroll Buttons** to set the minutes for the third start up. Confirm the value by pressing the **Flame Button**.
Now press the **Scroll Buttons** to select the hour at which you wish the appliance to shut off automatically (OFF3). Once the hour has been set, confirm the value by pressing the **Flame Button.** Once confirmed, the selector shifts to the minute section of OFF3. Press the **Scroll Buttons** to set the minutes for the third shut off. Confirm the value by pressing the **Flame Button.**

At this point the third and final ON/OFF cycle for the selected day has been set.
Alternatively, if you wish to copy the exact same programming for the ON/OFF cycles set for a particular day to the next day simply press the **Ventilation button**.

For example: if I want to copy all the programmed ON/OFF cycles set for Monday to Tuesday the following screen will appear:

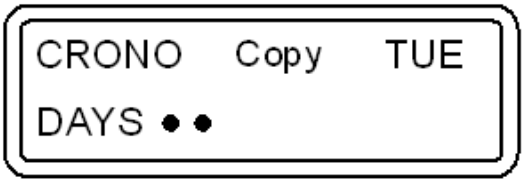


I press the **Ventilation button** once again to copy all the cycles programmed for Tuesday to Wednesday. The following screen will appear:

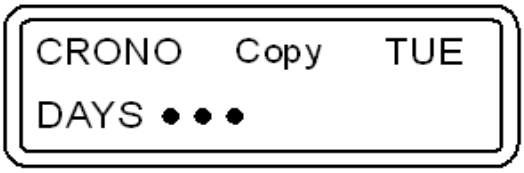


Using the same logic, we can copy the programmed cycles to the other days.

7) To conclude the programming operations simply press the **Menu Button** to exit the screen, and the initial screen will appear.

**ATTENTION: the appliance ignores any ON or OFF command programmed with a value of 00:00**. Consequently, if you do not wish to use an ON or OFF time setting simply set a value of **00:00**. The appliance ignores any ON or OFF command if the shut off time is set the same as or before the start up time.

**ATTENTION:**
In the event of a programmed cycle on always ensure that the brazier is clean and in the correct position. Failure to clean the brazier can reduce and/or affect the life of the spark plug as it would be subjected to high temperatures due to poor cooling. It is recommended to set ON/OFF cycles times lasting no less than 2 hours, in order to save energy and for the proper operation of the appliance.

Enabling the programmed cycles:

Back in the initial screen, to enable the appliance to carry out the ON/OFF cycles as programmed simply press the **Clock Button**. The text CR.ON and the image of a clock will appear on the main screen:




The programmed cycles are now enabled.

**When the programmed cycles are enabled (a clock symbol appears on the display) it will not be possible to use an additional chronothermostat (see dedicated paragraph).**

Disabling the programmed cycles:
To disable the appliance from carrying out the programmed ON/OFF cycles press the **Clock Button** once again.
The text CR.OFF will appear on the display and the clock symbol will disappear. This operation disables the weekly program that has been set by the user but does not delete or reset the times.

Resetting the programmed cycles:
Moreover, it is possible to reset, in other words delete, all the programmed cycles entered by the user by holding down the **Clock Button** in the initial screen for approx. five seconds.

Do not release the button until the text RESET CRONO appears on the screen. Only the appearance of the words RESET CRONO signal that the previously entered programmed cycles have been deleted. When the programmed cycles are active the operating level at start up, that is the combustion power, will be the same level set before the last time the machine was shut off: that is, only if it was a programmed shut off, not if the machine was shut off by means of a manual action. Manual shut down can only be carried out with the programming disabled. If after a manual shut off the programmed cycle re-enables, at the next programmed start up the appliance will be on the first combustion power level.

## 5.5 LEVEL: OPERATING LEVEL SETTING

The appliance must be energised and the I/0 switch in position "I".
Your appliance is delivered with an excellent program installed that favours combustion efficiency; the program is called **LEVEL 1**.

However, if you are using pellets with a higher than normal incidence of residues after combustion in the brazier, it is possible to select alternative levels:
**LEVEL 2** is an operating program that accelerates the speed of the smoke suction unit in proportion to all the combustion power levels. This level must be set when the user notices a weak, high and very dark flame. Attention: this modification does not authorise the use of below-standard pellets, or no vacuum in the flue outlet.

If using loosely compressed pellets, you could select:
**LEVEL 0**: is an operating program that decelerates the speed of the smoke suction unit when using loosely compressed pellets and/or when the flue outlet has a very high vacuum, over 2 mm water column (20 Pascal).
The pellet consumption value remains unchanged regardless of the selected operating level. These variations will only change the rotation of the smoke suction unit in the WORK stage, all the other stages will not undergo any changes.

Select the required Level by acting as follows:
1) Press the **Menu Button** three times quickly and the following box will appear:

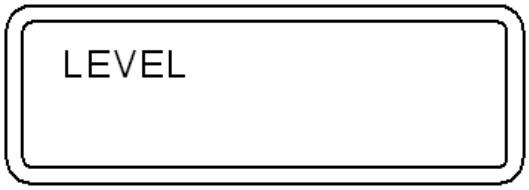


After a few seconds the following screen will appear on the display:

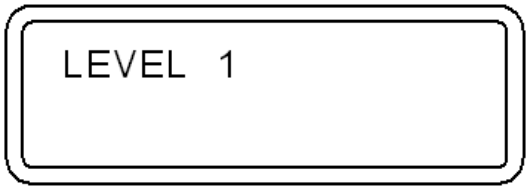


2) To change the operating level, hold down a **Scroll Button** while simultaneously pressing the other **Scroll Button.**

To set the desired level or to exit the screen simply press the **Menu Button;** the initial screen will appear on the display.
The level selection can be made with the appliance **OFF** or **ON**. If the change is made while the appliance is running the difference in the flame will be apparent. It is mandatory to pay particular care when selecting the most appropriate operating cycle for your installation. After the selection of the operating cycle a thorough cleaning of the brazier is mandatory.

## 5.6 ROOM CONTROL: CONNECTION WITH THE ROOM CONTROL DEVICE (OPTIONAL)

See the specific manual for the ROOM CONTROL device (Optional).

## 5.7 SHOW CRONO: ON-OFF PROGRAMMING DISPLAY

The appliance must be energised and the I/0 switch in position "I".

This function enables you to consult the programmed ON/OFF cycles carried out through the CRONO function.

Proceed as follows to view the programmed ON/OFF cycles:

1) Press the **Menu Button** five times quickly until the SHOW CRONO screen appears, and after a few seconds the following screen will appear:

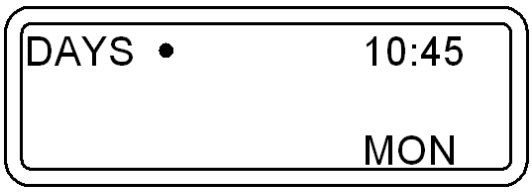


2) Press the left **Scroll Button** repeatedly to scroll and consult the programming for all the days of the week.

Attention: the on-off programming cannot be modified from the SHOW CRONO menu. This menu is used only for viewing the programming cycles that have been entered and/or edited through the CRONO menu.

## 6 – USE OF THE APPLIANCE

### 6.1 DESCRIPTION OF THE OPERATING STAGES

**START:** has a duration of approx. 20 minutes, during this phase the appliance is programmed to light the flame. The appliance will not accept power variations in the firebox. If the appliance does not start up correctly it could be due to one of the following factors: cleanliness of the generator, smoke exhaust particularly cold, sudden surges and drops in the electric power supply, fuel is too moist or does not comply with the specifications.

**WORK:** the appliance works according to the combustion and ventilation power set by the user. The spark plug is dead.

**OFF:** has a duration of approx. 25 minutes. In this phase the appliance is switched off until a new "on" phase is initiated. The aim is to make the pellet embers in the brazier die out and cool the appliance. The room fan and the smoke suction unit continue to operate as required.

### 6.2 SWITCHING ON THE APPLIANCE

Before using the appliance check that all the movable parts are correctly fitted. Also remove any labels and stickers from the glass to avoid that permanent traces remain on the surfaces. Verify that the electric connections have been made perfectly. Check also that the firebox door is firmly closed.

Then carry out the following operations:

1) Power up the appliance and turn the I/0 switch to position “I”.
2) Ensure that the appliance is connected to the smoke exhaust: we recommend against using aluminium tubes and we recommend always using sealing gaskets. Further information is given in paragraph dedicated to the smoke discharge of this use and maintenance booklet.
3) Load the pellets into the hopper.
4) Press the **Flame Button** to begin the start up phase and the word **START** will appear on the display.

Press the **Flame Button** repeatedly to set the desired combustion power which will only activate at the end of the START cycle which takes roughly 20 minutes.
In this stage any level of combustion power set by the user is ignored to meet the correct power values set by the manufacturer.
Press the **Ventilation button** repeatedly to set the six fan speeds; the fan will only activate once the smoke has reached the pre-set temperature.
The electrical heater will start to overheat and only after a few minutes the first lot of pellets will start dropping into the brazier. This occurs because the screw feeder has to fill up because it is completely empty. At the first start up the appliance may require the starting sequence to be performed twice for the reason explained above: before starting up the second time empty and vacuum out the brazier.

ATTENTION: during the START sequence the appliance ignores all the combustion power changes that are transmitted to it or set on it. Once this phase has ended the word WORK appears on the display.
When the machine is in the running phase the combustion can be changed manually.

ATTENTION: if the appliance does not start up correctly check that the brazier and electric heater are clean. It is very important to ensure that the tube lodging of the electric heater is clean; there must be no deposits or dust. It is recommended to use an efficient ash vacuum cleaner but only when the appliance has cooled down.

### 6.3 COMBUSTION AND VENTILATION ADJUSTMENTS

Set the combustion power of the stove by acting on the **Flame button**. The combustion power regulates the pellet drop. The selected combustion power level will appear on the display.
Set the ventilation speed of the stove by acting on the **Ventilation Button**. The ventilation speed regulates the number of fan revolutions. A slight vibration of the stove is quite normal when it is running. The selected ventilation power level will appear on the display.

### 6.4 CHANNELLING

To obtain an optimal flow of ducted hot air it is advisable to comply with the following instructions:
- Avoid narrow or reduced sections, sharp curves, downhill runs in the tubing.
- Reduce the horizontal runs as much as possible.
- Use pipes with smooth inner surfaces made of material capable of resisting continuous temperatures of 150°C.
- Insulate pipes with mineral wool (resistant to at least 150°C).

The appliance is supplied with all duct vents blocked (two at the rear and one on the left side). If you wish to use them, remove the covers (A) by undoing the screws (B). Position the supplied ducting collars (C) and fix them with the screws B just removed.
If the coaxial smoke outlet is used, it will not be possible to use the lateral channelling.

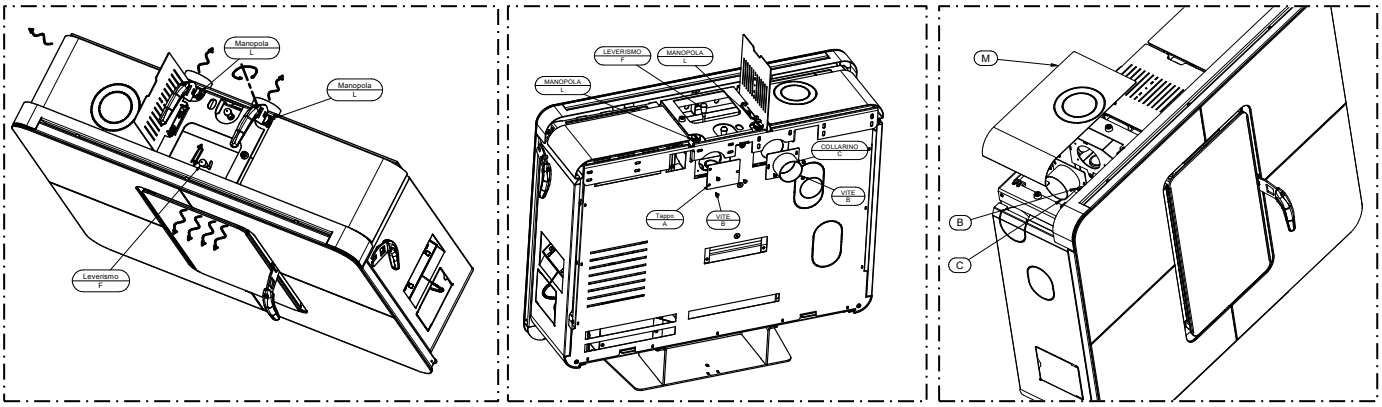


| Legenda | Key |
|---|---|
| MANOPOLA | KNOB |
| LEVERISMO | LEVER |
| Tappo | Plug |
| VITE | SCREW |
| COLLARINO | COLLAR |

The air can be distributed from the front, side or back.
• To adjust the front and side/rear outflow rate act on the lever (F).
• To adjust left/right rear air flow rate act on the left/right knobs (L).
• Once the cap (A) has been removed, it will not be possible to exclude or adjust the air flow on the left channelling.

ATTENTION: when the appliance is running the channelling adjuster knobs (L) and the levers (F) are extremely hot to the touch. Consequently, it is mandatory to use the handle or the special glove provided.
ATTENTION: if the two rear outlets are not used, it is mandatory to position the lever (F) so that the air is totally discharged out to the front. Failure to observe this prescription may damage the appliance.

### 6.5 SWITCHING OFF THE APPLIANCE

To switch off the appliance press the **Flame Button** until the power bars on the display disappear and the text OFF appears.

DO NOT disconnect the generator from the electric power socket to switch it off. This operation generates smoke that could not be evacuated because of the construction characteristics of the flue outlet.
The OFF procedure lasts for approx. 25 minutes.

## 7 – ADDITIONAL ROOM TEMPERATURE THERMOSTAT / ADDITIONAL CHRONOTHERMOSTAT - MODEM

Your appliance is already fitted with all the temperature adjustment and programming functions. However, it is possible to connect the appliance to an additional room temperature thermostat or chrono-thermostat:
---> for an additional room temperature thermostat connect terminals 7-8 directly to terminal bock CN7 on the board as illustrated in the figure below.
---> for an additional chrono-thermostat – modem connect terminals 9-10 directly to terminal bock CN7 on the board as illustrated in the figure below.

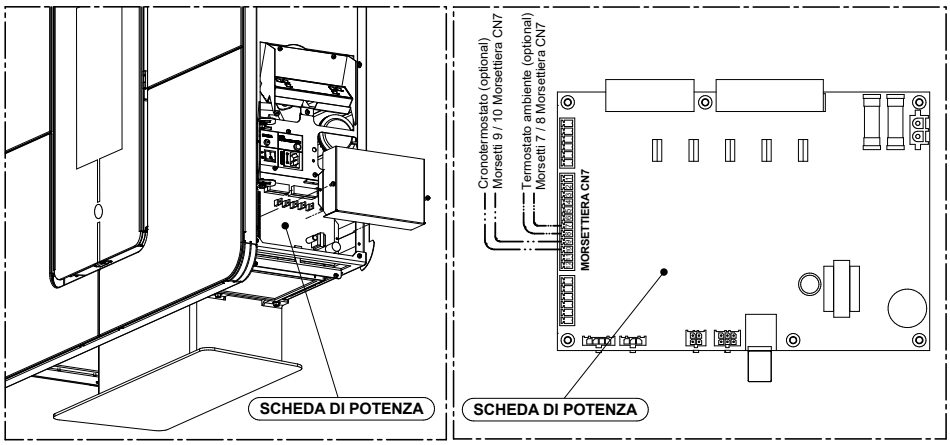


Contacts are defined as "CLEAN" contacts and they must never be fed with 220 V. It is strictly prohibited to supply any tension whatsoever to the above-mentioned terminals as this would permanently damage the control board. Damage resulting from failure to observe these instructions is not covered by the WARRANTY.

| Legenda | Key |
|---|---|
| SCHEDA DI POTENZA | POWER BOARD |
| Cronotermostato (optional) | Chrono-thermostat (optional) |
| Morsetti 9 / 10 Morsettiera CN7 | Terminals 9 / 10 Terminal block CN7 |
| Termostato ambiente (optional) | Room thermostat (optional) |
| Morsetti 7 / 8 Morsettiera CN7 | Terminals 7 / 8 Terminal block CN7 |

This operation must be exclusively performed by qualified professional staff, as set forth by Decree no. 37 of 22nd January 2008 and applicable laws on the subject. Before performing said task, make sure the power supply cable is disconnected from the electrical power socket.

### 7.1 OPERATING WITH THE ADDITIONAL ROOM TEMPERATURE THERMOSTAT (not supplied)

An additional room temperature thermostat can be installed by connecting it to the board as shown in the figure. The operating principle is as follows:
-When the room temperature reaches the set temperature (only during the WORK phase) the thermostat closes the contact and the appliance shifts to the minimum room fan speed and minimum combustion power. This condition is shown on the display with the flashing of the bar indicating ventilation and the bar indicating combustion: the appliance overrides all prompted commands. By using the room temperature thermostat, the appliance does not shut down, therefore electrical energy consumption is kept to the minimum and the heater has a longer life. When the room temperature drops the thermostat opens the contact and the appliance returns to its original position in terms of thermal power and ventilation. In this position the appliance can be started up automatically via the programming.

**ATTENTION:** use N.O. (normally open) contacts for the connection to the additional room temperature thermostat. The thermostat must have a thermal hysteresis that is not less than 2°C.
**If you use the Room Control device you cannot use the additional room temperature thermostat**.

### 7.2 OPERATING WITH THE ADDITIONAL CHRONO-THERMOSTAT (not supplied)

As an alternative to the room temperature thermostat, a chrono-thermostat can be installed by connecting it to the board as shown in the figure. This function is particularly suitable for people with impaired vision. Using this output when the chrono-thermostat contact closes the START cycle begins, whereas when the contact opens the OFF cycle begins. The operating level at start up (combustion power - fan speed) is the same as the level used before the last time the appliance shut down.
***ATTENTION: when using the chrono-thermostat program up to a maximum of 3 on-off cycles without setting the desired target temperature or set it at the highest possible value for the chrono-thermostat.***
At the end of the pre-set time the contact will open and perform the appliance shut down process. Similarly at the pre-set startup time the contact will close and initiate the START cycle. The chrono-thermostat can be used to program start up and shut down times and dates for the appliance. It is therefore possible to program a momentary shut down of the appliance according to the pre-set time.
***Do not shut down the appliance according to the room temperature***.
It is mandatory to deactivate the “Crono” symbol on the display if an external chrono-thermostat is used.

**ATTENTION:** the manufacturer denies all responsibility for the life of the electrical heater if subjected to excessive start ups. It is recommended not to set the desired room temperature or to set it at the highest possible value for the chrono-thermostat in order to avert this danger.
**ATTENTION:** use N.O. (normally open) contacts for the connection to the chrono-thermostat.
**ATTENTION:** in the event of connections to the chrono-thermostat Thermorossi shall not be held responsible for the appliance not starting up, smoke leaks and breakage of the lighting component. In the event of a programmed cycle on always ensure that the brazier is clean and seated correctly in its lodging. A maximum of 3 on-off cycles per day are permitted. The chrono-thermostat must have a thermal hysteresis that is not less than 2°C.
**If you use the Room Control device in Switch Mode you cannot use the additional room temperature thermostat.**

# 8 – CLEANING AND MAINTENANCE

## 8.1 FOREWORD

Before commencing any operation disconnect the appliance from the electric power outlet. Your pellet appliance needs maintenance; it requires a few simple, basic but frequent control and general cleaning operations. This will guarantee safe and regular operation and optimal output at all times. If the product is unused for a prolonged period of time it is mandatory to inspect the smoke channel and outlet to ensure that there are no obstructions before use. It is important to carefully follow the instructions set out below: failure to observe these instructions could cause serious damage to the product, to the system, to objects and to persons using the generator. Failure to observe cleaning and maintenance instructions will immediately void the warranty.

Caution: do not wet the appliance and do not touch the electrical parts with wet hands. Never vacuum hot ash: this could damage the vacuum device. All the cleaning operations described in this manual must be carried out when the appliance is cold.

## 8.2 CLEANING AND MAINTAINING THE APPLIANCE

| Legenda | Key |
|---|---|
| Figura | Figure |

The cleaning and maintenance operations can be carried out by the user.

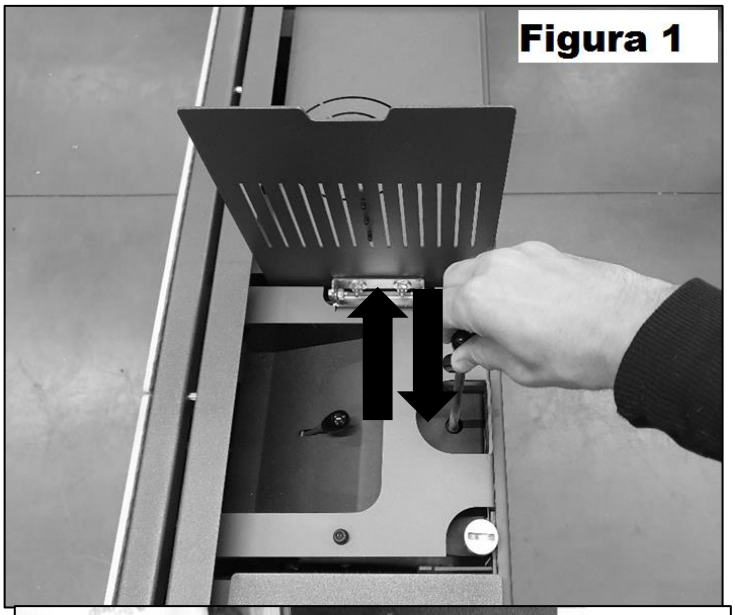


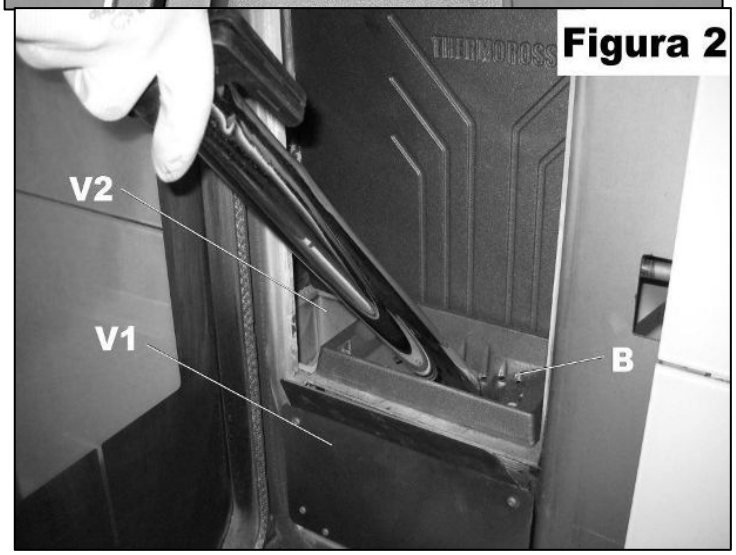


**DAILY:**
Remove the brazier **B** from its lodging and clean out the combustion residues. Remount the brazier **B** and the blade (Figure 2A) correctly making sure that the hole of the brazier matches up with the spark plug (Figures 2 and 4). To open and close the door use the tool provided. Figures 2 and 4 show a clean brazier.
ATTENTION: make sure, before every start up, that the brazier is clean and if necessary, also thoroughly clean it with a suction unit. To guarantee correct operation of the appliance and to prevent lighting failures, carefully clean the area around the spark plug.
ATTENTION: in the event of a failed lighting cycle, before relighting the appliance make sure that the brazier is empty and clean.

**EVERY 3 DAYS:** Lift and drop the tube scraper rod several times (Figure 1); to access the tube scraper rod you must open the cover on the top of the appliance. **ATTENTION: carry out this operation when the appliance is OFF and completely cooled down because during operation the rod may reach extremely high temperatures.**

**EVERY 5 DAYS:** Clean the room air filter located at the bottom of the appliance.

**WEEKLY:** Clean out all the ash from the ash pans **V**, **V1** and **V2** (Figure 2, 3, 4, 5, 8): to access pan **V** simply remove the brazier **B** from its lodging.

**EVERY 2 WEEKS:** Clean the smoke exhaust "T" at the appliance inlet, if installed. Inspect and clean the smoke exhaust "T", inside the appliance, by removing the inspection cap located on the left side of the appliance (Figures 9 and 10).

**MONTHLY:**
- Inspect and clean the vent identified as **A1.** To access the vent, open the door, remove the ash pan and lift the flap **L** (Figure 8).
- Check that the smoke exhaust is free from ash deposits, particularly in the initial sections.
- Vacuum the ash deposited on the bottom of the tank (when the tank is empty). To do this, obtain a reduction tube to connect to your vacuum cleaner.

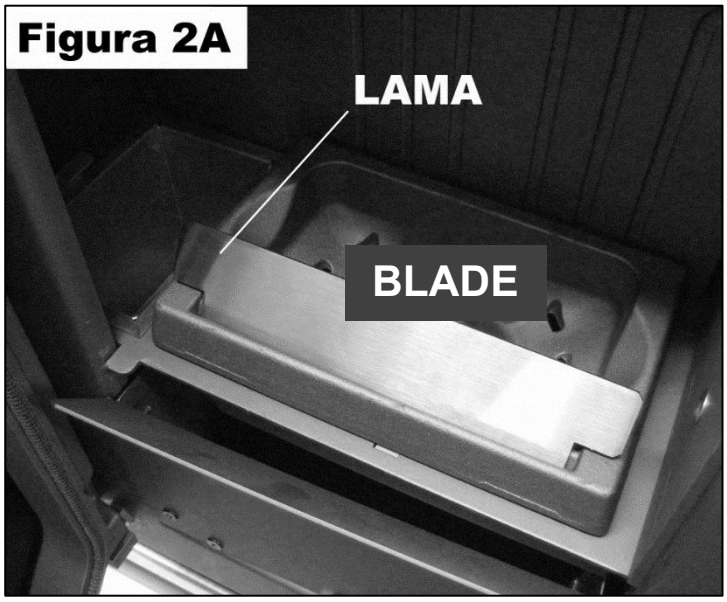

**Figura 2A**

**EVERY 3 MONTHS:**
- Clean the smoke ducts and check that they are airtight.

**TWICE A YEAR:**
- Clean the flue and ensure that the smoke outlet is sealed.
- Remove the back of the combustion chamber. To remove it, lift it up and simultaneously rotate it towards the outside of the appliance. Also thoroughly clean the tube bundle (Figures 6 - 7).

**AT THE END OF THE WINTER SEASON OR WHENEVER NECESSARY:**
Do an in-depth cleaning of the appliance firebox, with brushes and a vacuum cleaner. Using a vacuum device simplifies cleaning out the ashes. Use a damp cloth or a scrunched-up piece of newspaper, dampened and rolled in the ash, to wipe the glass until it is perfectly clean. Do not clean the glass while the appliance is operating. The glass retains an acceptable degree of cleanliness if all the cleaning instructions contained in this manual are adhered to.
The front profiles, the glass elements and the casing must be cleaned, when the appliance has cooled, with a special soft microfibre cloth for delicate surfaces such as lenses, glasses, monitors, etc, ..., and water.
ATTENTION: a daily deposit of soot and combustion residues on the glass is quite normal.

It is normal for the ash to fall to the floor when the door is opened. ATTENTION: after cleaning it is mandatory to carefully check that the combustion chamber door is firmly closed and airtight. ATTENTION: the smoke channel, the flue outlet and the generator must be cleaned in accordance with the specifications described above and use of inflammable products is strictly forbidden: Failure to carry out the necessary maintenance or if only partial maintenance is carried out will affect the correct functioning of the appliance. Any problems resulting from total or partial lack of maintenance will immediately void the warranty.
ATTENTION: if the appliance remains inactive (not used for over a month) the appliance, the smoke discharge tube and the flue outlet must be thoroughly cleaned and checked for any possible obstructions (e.g., birds or wasp nests) before restarting.

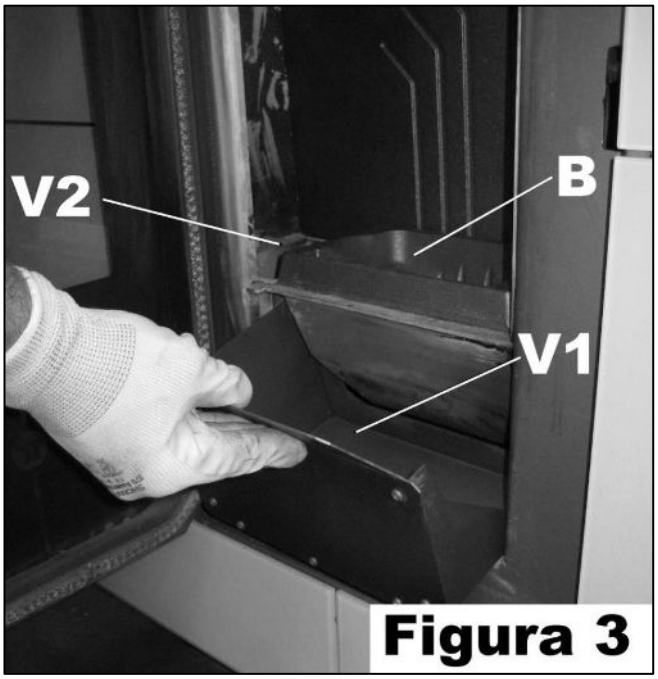

**Figura 3**

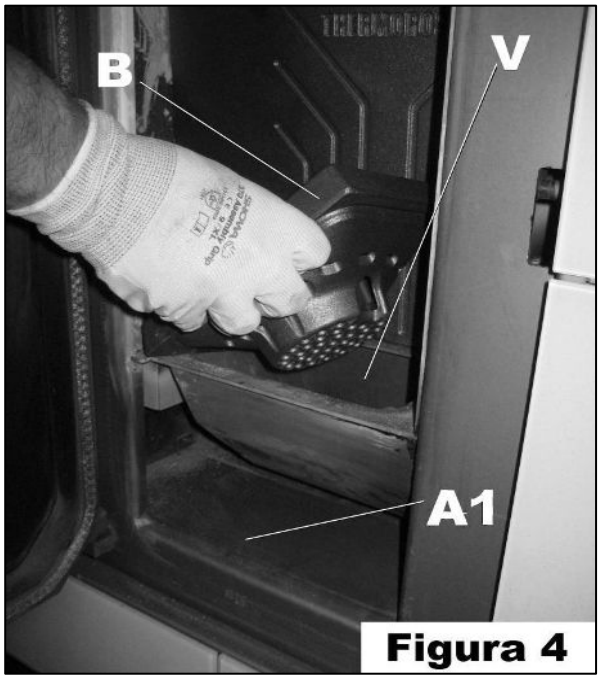

**Figura 4**

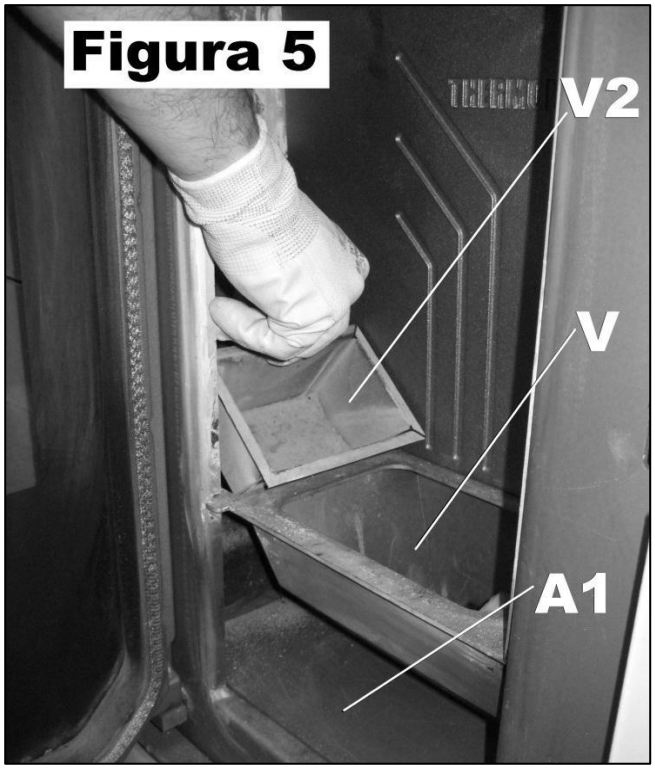
Figura 5
V2
V
A1

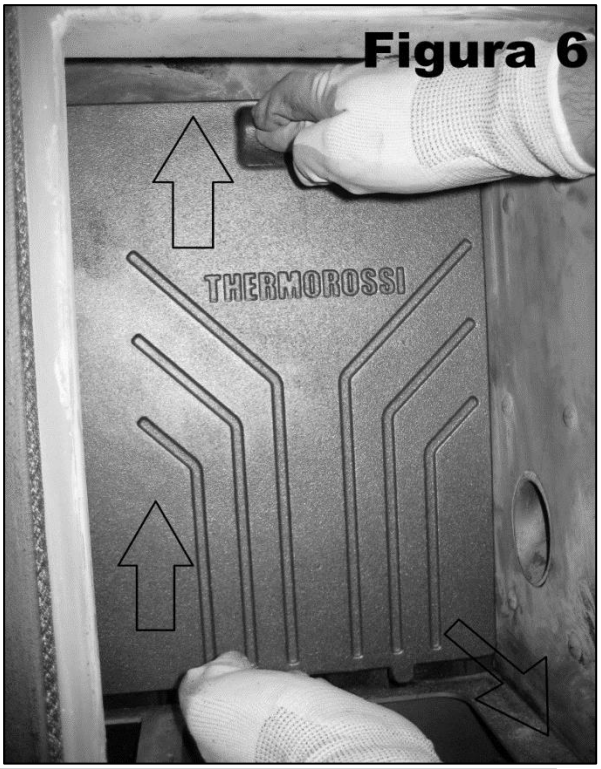
Figura 6
THERMOROSSI


Figura 7

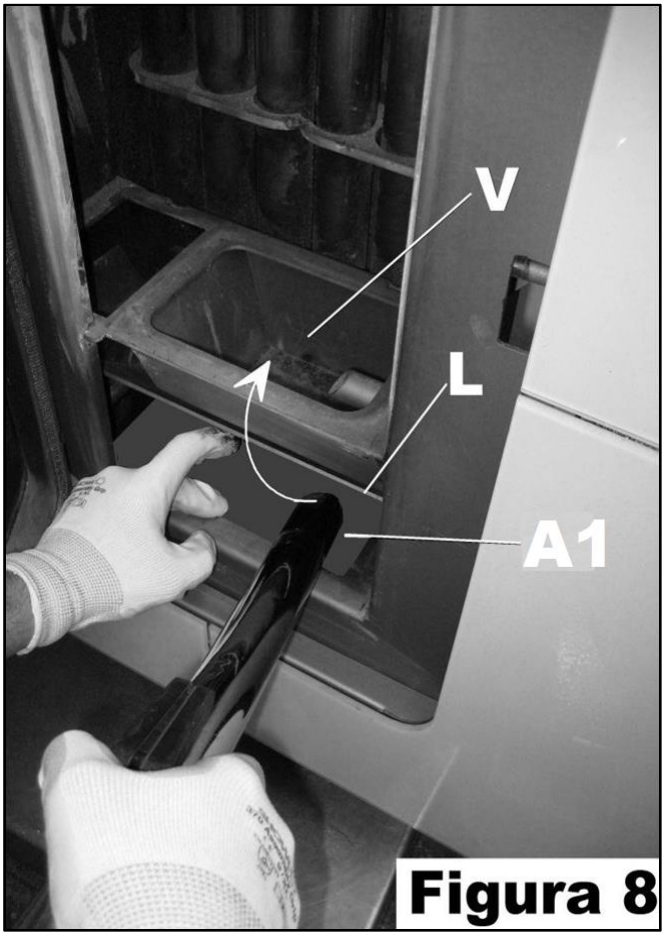
V
L
A1
Figura 8




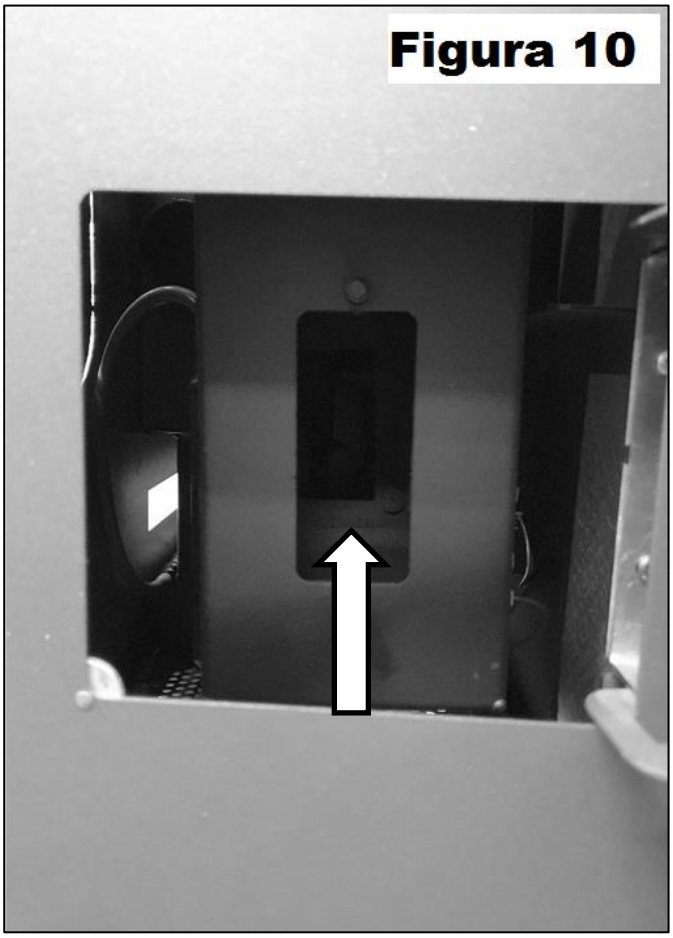


### 8.3 AIR FILTER

Your appliance is fitted with an air filter; a practical device that prevents the circulation of dust particles that are always present in domestic environments. The filter (shown in the image below) is installed in the bottom right part of the appliance.
Frequent cleaning will ensure greater availability of hot air during operation and less overheating of the appliance.
The filter must be removed and cleaned every 5 days; soak in cold water then dry thoroughly before reinstalling it.

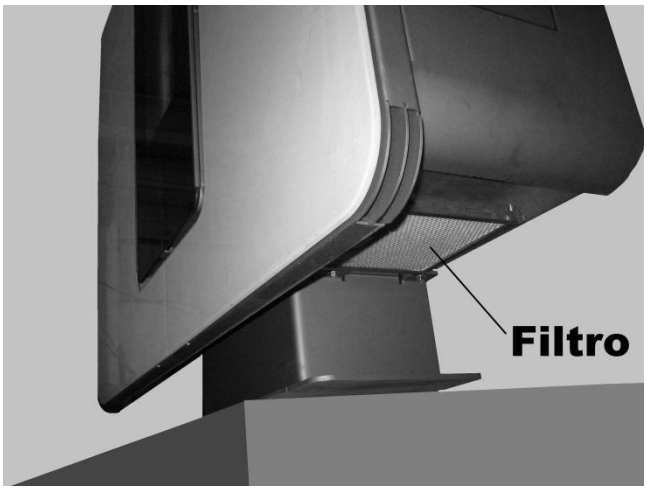


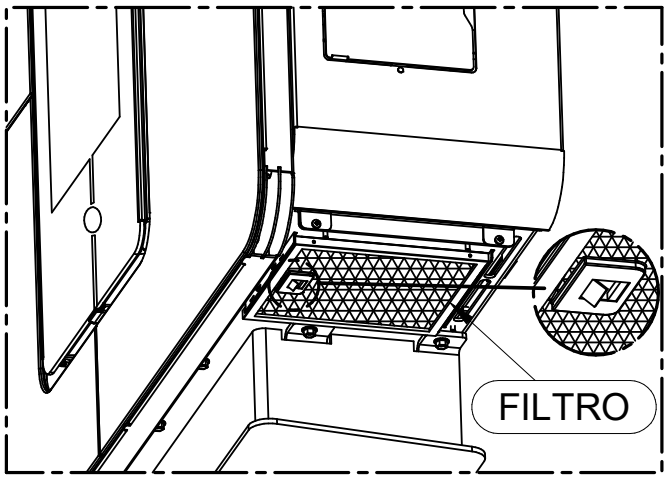


| Legenda | Key |
|---|---|
| FILTRO | FILTER |

### 8.4 REPLACING THE BUFFER BATTERY OF THE CONTROL PANEL

Inside the control panel there is a buffer battery type CR 1632. When the time and programming are not being memorised, then the battery needs replacing. This malfunction must not be considered a defect as it is the result of normal battery depletion.
To replace the battery, remove the right side panel of the appliance and then also the control panel A, by undoing the three screws B that fix it to the structure. The dead battery must be disposed of safely.

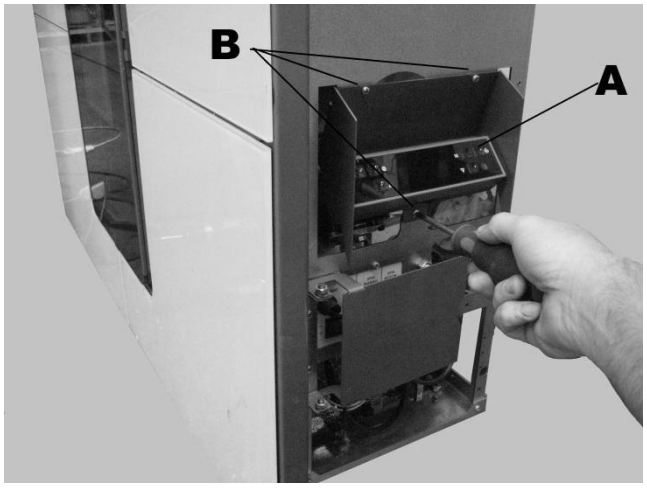


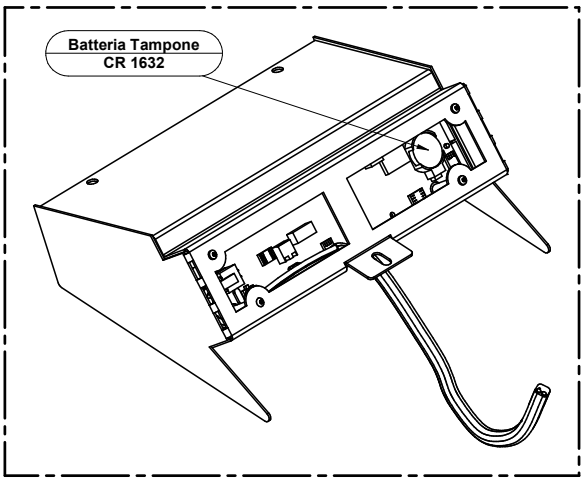


| Legenda | Key |
|---|---|
| Batteria Tampone CR 1632 | Buffer battery CR 1632 |

This operation must be exclusively performed by qualified professional staff, as set forth by Decree no. 37 of 22nd January 2008 and applicable laws on the subject. Before performing said task, make sure the power supply cable is disconnected from the electrical power socket.

## 9 – SMOKE DISCHARGE TUBE AND VENTILATION OF THE ROOMS

### 9.1 FOREWORD

Due to the frequent accidents caused by poor functioning of flue outlets installed in private dwellings, we have prepared the following paragraph to assist the installer in his inspection of the parts concerned with eliminating the gases produced by combustion.
The flue outlet must comply with UNI 10683 and be built in accordance with the requirements set out in Italian Decree No. 37 of 22 January 2008, respecting the reference values expressed in the standard; in particular, the flue outlet must conform to fire prevention standards (it must therefore be capable of withstanding a possible fire action: in such a situation contact the fire department immediately). This chapter is not intended to replace UNI 7129, UNI 10683 and EN 14785 standards to which it refers. The qualified installer must in any case be fully aware of these standards and any amending versions. *It is important to carefully follow the instructions set out below: failure to observe these instructions could cause serious damage to the product, to the system, to objects and to persons using the generator.*

### 9.2 ROOM VENTILATION

ATTENTION: the presence of extraction fans or similar appliances, if operating in the same room or space in which the product is installed, could cause problems for the correct operation of the product.

ATTENTION: do not obstruct the vents or the air inlets on the appliance.

The room where the appliance is installed must have a good air flow to guarantee air for the appliance for the combustion process and for ventilation of the room. The natural air flow must take place directly through permanent openings on the outer walls or through single or multiple ventilation ducting (paragraph 9.2.1).
The ventilating air must come from outside and if possible, away from sources of pollution. The openings in the walls must comply with the following conditions:
• have an unobstructed section of at least 6 cm² for each Kw of installed thermal power, with a minimum limit of 100cm²;
• be made in such a way that the vent openings, both on the inside and outside of the wall, cannot be obstructed;
• be protected with grills or similar systems that do not reduce the opening section indicated above;
• be situated at a height near floor level and they must not obstruct the correct operation of the combustion product discharge devices; if this position is not possible the section of the ventilation openings must be enlarged by at least 50%.

*9.2.1 VENTILATION FROM ADJOINING ROOMS*
The air flow can also be obtained from an adjoining room as long as:
• the adjoining room is equipped with direct ventilation in compliance with the paragraphs described above;
• only appliances connected to the exhaust pipe are installed in the room that is ventilated;
• the adjoining room is not used as a bedroom or a common area of the building;
• the adjacent room is not a room with a fire hazard, such as storage sheds, garages, combustible material store rooms, etc...;
• the adjoining room does not become a vacuum compared to the room to be ventilated due to a reverse draught effect (the reverse draught can be caused by the presence in the room of either another heating appliance running on any type of fuel, a fireplace, or any suction device, which have not been provided with an air intake);

• the air flow from the adjoining room to the room to be ventilated is unobstructed through the permanent apertures having an overall net section of no less than that indicated above. These apertures can be obtained by enlarging the space between the door and the floor.

## 9.3 SMOKE OUTLET

The smoke channel, the exhaust pipe, chimney and flue outlet (defined as the system for the evacuation of combustion products), are parts of the heating system and they must comply with the legislative requirements of the Ministerial Decree DM 37/08 (ex Italian Law 46/90) and to the applicable specific installation regulations, according to the type of fuel. Fireplaces, stoves and barbecues must not be installed in locations where gas appliances type A and type B are present and operating (for the classification see UNI 10642 and UNI 7129). The connection between the appliance and the flue outlet must only receive exhaust from one heat generator.

### *9.3.1 CHIMNEY TYPES*

The following types of chimneys, constructed as described, are possible:
• System: Chimney installed using a combination of compatible components (flue liner, insulation, outer casing etc…), constructed or specified by a single manufacturer and CE certified in accordance with the applicable standard;
• Composite chimney: Chimney installed or constructed on site using a combination of compatible components such as flue liner (wall directly in contact with the smoke), and possibly also insulation and outer casing (wall) that may be supplied by different manufacturers or by the same manufacturer;
• Relining: operation involving the installation of a specific pipe in an existing shaft (even if newly constructed) made of non-combustible materials, free from obstructions and for single use.

### *9.3.2 FLUE OUTLET / FLUE SYSTEM COMPONENTS*

1 Chimney
2 Flow path
3 Smoke discharge tube
4 Thermal insulation
5 External wall
6 Outer lining
7 Flue outlet section
8 Multiwall chimney
9 Connector
10 Flue pipe
11 Heat generator

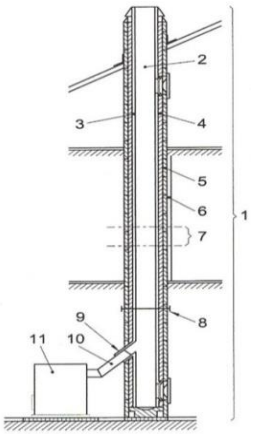


Every chimney must have minimum number of components as laid down by standard UNI EN 1443 which are also indicated in the figure on the left.

Wall outlets, that is outlets installed on the outer front wall without the use of a chimney/flue outlet /flue pipe to convey the combustion products to the roof, are strictly prohibited.

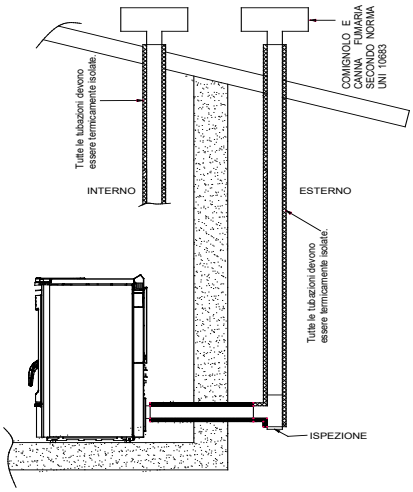


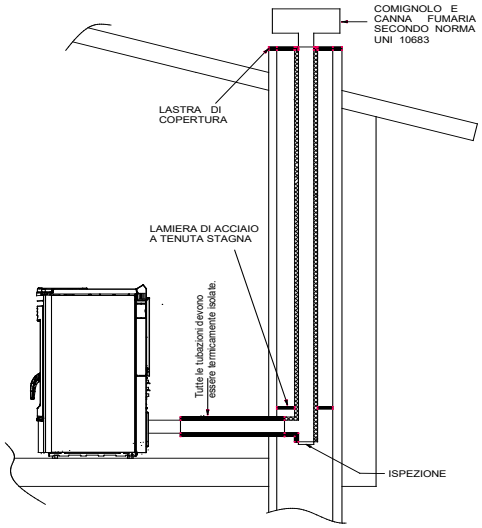

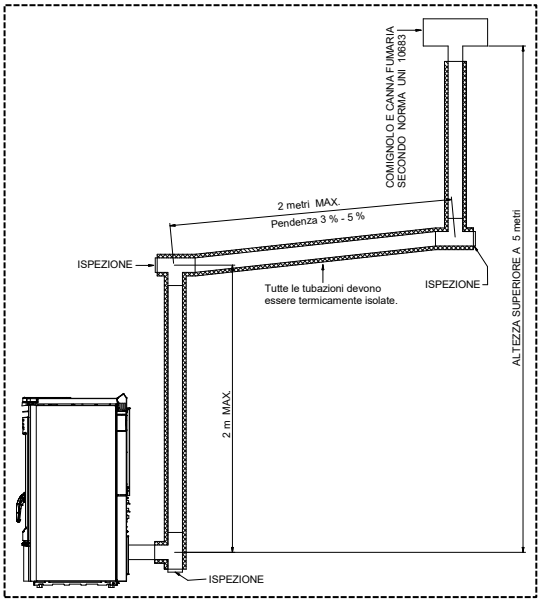


*9.3.3 CONTROLS PRIOR TO INSTALLING THE APPLIANCE*

The user must possess a certificate of conformance for the flue outlet (Ministerial Decree 22 January 2008, no. 37).
The flue outlet must be built in compliance with UNI 10683.
The smoke exhaust shown in the following figures is the best solution to ensure the discharge of smoke even when the fan is not operational, such as for example if there is an electrical power failure. Failure to observe these requirements could result in stagnation of the gases in the firebox and could explode when discharged to the environment. The figures illustrate the best solution for discharging the smoke out through the roof or into the flue outlet. If you prefer to exhaust the smoke from the roof insert a union tee with inspection cap, connecting brackets suitable for the height of the flue outlet, flashing that crosses the roof and chimney cap to protect against bad weather conditions.
If you decide to use the classic masonry exhaust provide a union tee with inspection cap and suitable supporting brackets.
If the flue outlet is too big it is necessary to insert a stainless steel or porcelain-coated steel tube with a diameter not exceeding 150mm. Seal area where the inlet and outlet part of the smoke exhaust meets the wall.
It is strictly forbidden to apply mesh to the end of the outlet tube, as it could cause the appliance to malfunction. If the smoke tube is installed in a fixed position, it is advisable to provide inspection openings for clean-out purposes especially in the horizontal sections. See the diagram. These openings are essential to allow for the removal of ash and unburned products which tend to accumulate along the discharge path. The appliance functions with the combustion chamber in a vacuum, while the discharge of smoke to the flue outlet has a slight pressure, consequently it is imperative to ensure that the discharge system is hermetically sealed. The smoke discharge tube must be made from suitable materials such as for example: porcelain-coated steel tubes, and the various fittings sealed with red silicone (resistant to 350°C). The outer casing of the tube must be made with insulating material (mineral wool, ceramic fibre) or use pre-insulated tubing.

**THE FLUE OUTLET MUST BE USED ONLY FOR THE APPLIANCE.**

It must be possible to inspect and remove all the smoke tube sections for clean-out purposes.

ATTENTION: if the flue outlet is not sufficiently insulated and /or if it is too long it could generate condensation. It is mandatory to provide a condensation drain near the smoke outlet of the appliance. The appliance must always and only be installed in a single flue outlet system dedicated exclusively to the appliance.
If the generator is connected to a non-compliant flue system the appliance could rapidly deteriorate due to an abnormal, continuous overheating: in this case the damaged parts will not be covered by warranty.

**IF THE CHIMNEY CATCHES FIRE DO NOT HESITATE TO CALL THE FIRE BRIGADE IMMEDIATELY.**

| **LEGENDA** | **KEY** |
|---|---|
| COMIGNOLO E CANNA FUMARIA SECONDO NORMA UNI 10683 | CHIMNEY CAP AND FLUE OUTLET ACCORDING TO UNI 10683 STANDARD |
| Tutte le tubazioni devono essere termicamente isolate | All the pipes must be thermally insulated |
| ISPEZIONE | INSPECTION |
| INTERNO | INTERNAL |
| ESTERNO | EXTERNAL |
| LASTRA DI COPERTURA | COVER SLAB |
| LAMIERA DI ACCIAIO A TENUTA STAGNA | WATERTIGHT STEEL SHEET |
| 2 metri MAX | 2 metres MAX |
| Pendenza 3% - 5% | Slope 3-5% |
| ALTEZZA SUPERIORE A 5 m | HEIGHT MORE THAN 5 m |

## 10 – ALARMS

The appliance is programmed to communicate 7 alarms.

**ATTENTION:** the appearance of one of the alarms described below, does not necessarily imply a defect in the product, but simply Thermorossi S.p.A.'s intention to inform the user of the need for corrective actions in order to guarantee maximum safety, greater reliability and high performance of the appliance.

The alarms are listed below:




This message appears when during the **WORK** stage the temperature of the smoke drops below a pre-set threshold: this means that the appliance is shutting off due to lack of pellets. To reset the alarm the power to the appliance must be switched off then on by turning the switch 0-1 located on the power panel. **It is mandatory to empty and clean the brazier**, and then to fill the pellet tank before repeating the START phase. It could be that the screw feeder is completely empty, so the start up sequence may have to be carried out twice.




This appears if, after the **START** sequence, the smoke has not reached a suitable temperature. To reset the alarm the power to the appliance must be switched off then on by turning the switch 0-1 located on the power panel.
**It is mandatory to empty and clean the brazier** before repeating the START phase: pellets emptied from the brazier must not be fed into the tank.




This occurs when the smoke outlet is partially blocked. To reset the alarm the power to the appliance must be switched off then on by turning the switch 0-1 located on the power panel.
Before restarting the appliance check for any irregularities such as blocked flue outlet, open firebox door, very dirty appliance.
**Do not start up the appliance until the problem has been identified and solved.**
**It is mandatory to empty and clean the brazier** before repeating the START phase: pellets emptied from the brazier must not be fed into the tank.




This appears when the appliance overheats. **After having verified and solved** the causes for the overtemperature, unscrew the plastic cover of the reset thermostat located on the power/control panel and press the button (the appliance can only be reset when its temperature has dropped considerably). To **reset the alarm** the power to the appliance must be switched off then on by turning the switch 0-1 located on the power panel.
**It is mandatory to empty and clean the brazier** before repeating the START phase: pellets emptied from the brazier must not be fed into the tank.




Appears when the smoke thermocouple is damaged or absent. Contact the technical assistance service.




Activates when the smoke suction unit revolution sensor detects a very slow rotation speed: check the flue pipes and the flue outlet. If the problem persists contact the technical assistance service.




Trips when the smoke suction unit revolution sensor fails to detect any rotation. The smoke suction unit or the rotation sensor are not working. Contact the technical assistance service.

## 11 – ELECTRICAL WIRING

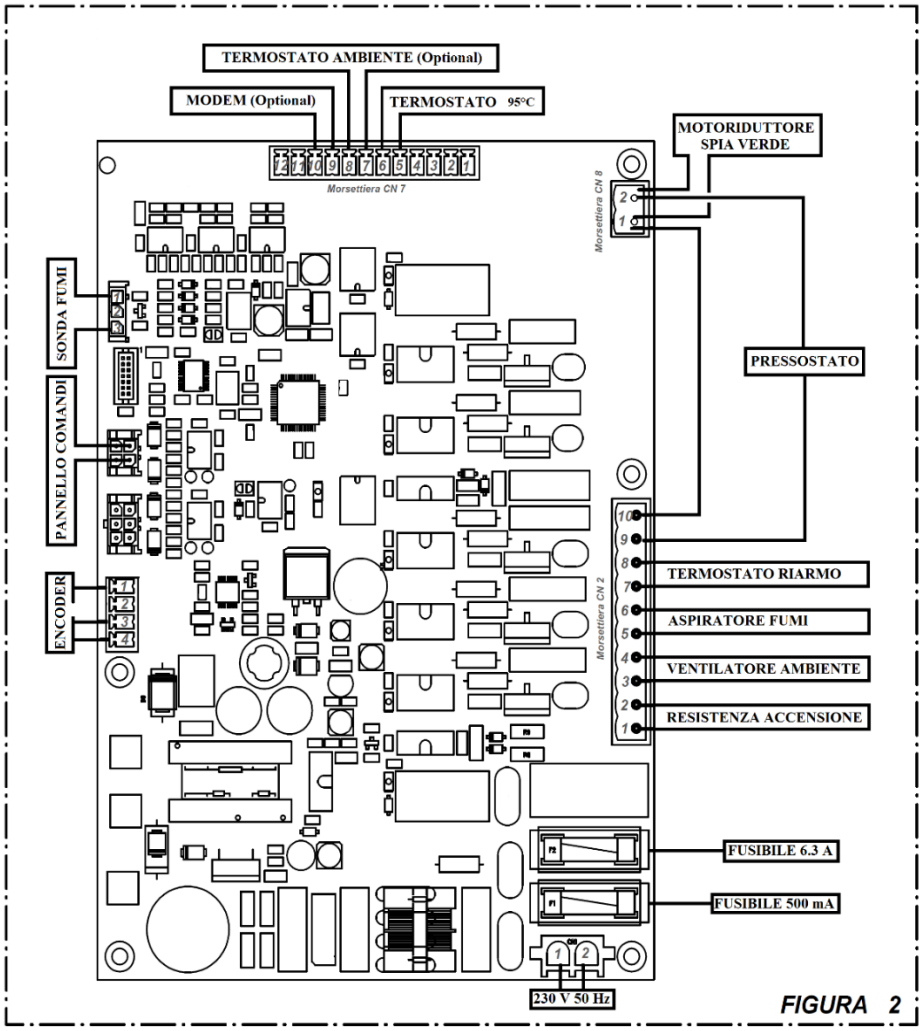


*FIGURA 2*

| **LEGENDA** | **KEY** |
|---|---|
| TERMOSTATO AMBIENTE (Optional) | ROOM THERMOSTAT (optional) |
| MODEM (Optional) | MODEM (Optional) |
| TERMOSTATO 95°C | THERMOSTAT 95°C |
| MOTORIDUTTORE SPIA VERDE | GEARMOTOR GREEN INDICATOR LIGHT |
| SONDA FUMI | SMOKE SENSOR |
| PANNELLO COMANDI | CONTROL PANEL |
| ENCODER | ENCODER |
| PRESSOSTATO | PRESSURE SWITCH |
| TERMOSTATO RIARMO | RESET THERMOSTAT |
| ASPIRATORE FUMI | SMOKE SUCTION UNIT |
| VENTILATORE AMBIENTE | ROOM FAN |
| RESISTENZA ACCENSIONE | LIGHTING HEATER |
| FUSIBILE 6.3 A | FUSE 6.3 A |
| FUSIBILE 500 mA | FUSE 500 mA |
| Morsettiera CN ... | Terminal block CN ... |
| FIGURA 2 | FIGURE 2 |

# 12 – INFORMATION FOR THE SKILLED TECHNICIAN

## 12.1 MAIN COMPONENTS AND THEIR OPERATION

**SMOKE PRESSURE SWITCH**
This is a safety switch that stops the screw feeder motor whenever necessary. The main cause for the pressure switch tripping is a blocked flue outlet or smoke exhaust pipe. Note that it is strictly forbidden to apply any kind of mesh screen to the end of the pipe. When the holes of the mesh clog up they create a plug that trips the pressure switch which stops the pellet feeder.

**SCREW FEEDER MOTOR**
This motor is powered at regular on/off intervals controlled by a microprocessor. The operation of this motor is affected when:
-The motor's thermal cutout trips. -The pressure switch trips due to blocked smoke exhaust.
-Pellets finished. -Voluntary shut down of the appliance. -The manual reset thermostat trips at 125°C.

**ROOM FAN**
Starts automatically as soon as the smoke thermocouple detects a suitable smoke temperature. Similarly, it stops when the fuel is finished or during a voluntary shut down when the smoke thermocouple detects a suitable temperature for activating (to a maximum of 20 minutes).

**SMOKE SUCTION UNIT**
This is activated when the appliance starts up. In the first minute it «washes» the smoke discharge tube, that is, it functions at maximum working rate. Once this time has elapsed it self-adjusts to the optimal speed. The exhaust continues to operate for approximately twenty minutes from the time the appliance is switched off to allow for the evacuation of all the smoke and for safety purposes.

**THERMOCOUPLE**
Its function is to verify the temperature of the combustion smoke: when the smoke temperature exceeds a certain value it indicates that the appliance is on. Similarly, when the temperature drops below a certain limit it causes the presence of NO PELLET on the display.

**TANK SAFETY THERMOSTAT**
This thermostat starts operating as soon as the temperature in or near the pellet tank approaches 95°C and sends an immediate signal to the room fan to operate at maximum power.

**125°C MANUAL RESET THERMOSTAT**
When the temperature exceeds 125°C the pellet feed screw shuts down. Display shows the inscription “AL T max”. Once the causes for the overtemperature have been identified and remedied the appliance can be reactivated by unscrewing the plastic cover of the thermostat located on the right side and pressing the button (the appliance temperature must have considerably dropped).

**GLOW PLUG**
It is activated in the START phase. Heats the air to 800°C, which assist the first combustion of the pellets present in the brazier. The spark plug is guaranteed for a period of 6 months.

## 12.2 PRESCRIPTIONS FOR CORRECT OPERATION

• Read this use and maintenance booklet.
• The appliance must always be switched off from the control panel. It is forbidden to switch off the appliance by means of the main switch 0/I located in the power panel.
• The appliance must never be disconnected from the electrical power supply and the power supply must never be cut off during normal operation. Whenever the appliance is deliberately disconnected from the electric power supply smoke could be emitted into the room.
• Do not install the appliance with horizontal wall outlets only: Evacuation of products of combustion by natural draught must always be guaranteed as well. Unsuitable installation of the outlets could cause a forced shut down of the appliance due to overpressure of the exhaust smoke caused by a gust of wind.
• At the first startup, run the appliance at the maximum power and minimum ventilation for at least ten hours in a well-ventilated room, in order to dispose of the smoke generated by the complete dryness and baking of the silicates contained in the enamel coating of the combustion chamber.
• Do not install a grill or outlet terminal that could slow down the flow of the combustion gases: this would obviously cause the appliance to malfunction.
• Keep the appliance clean and check the burner as described in this use and maintenance guide.
• Clean the smoke outlet regularly.
• Use good quality pellets: use of poor pellets can result in up to 50% less efficiency.
• The pellets must be stored in a well-ventilated, dry place.
• The appliance door must always remain closed during normal operation.
• Do not touch hot outer surfaces, unless with special equipment.
• Do not pour the pellets or other substances directly into the brazier.
• Keep fuel and inflammable materials at a suitable distance.
• Use only original spare parts supplied by the manufacturer.

## 12.3 TROUBLESHOOTING CAUSE-SOLUTION

| PROBLEM | POSSIBLE CAUSE | SOLUTION |
|---|---|---|
| **PELLETS DO NOT DROP INTO THE BRAZIER** | PELLET TANK IS EMPTY<br>THE FOLLOWING ALARM IS SHOWN ON THE DISPLAY **"NO PELLET"** | CLEAN THE BRAZIER AS INDICATED IN THIS USE AND MAINTENANCE GUIDE, THEN FILL UP THE TANK WITH PELLETS |
| | PELLET SCREW FEEDER BLOCKED BY FOREIGN OBJECT SUCH AS NAIL, NYLON, PIECE OF WOOD<br>THE FOLLOWING ALARM IS SHOWN ON THE DISPLAY **"NO PELLET"** | CUT OFF THE POWER AND REMOVE THE FOREIGN OBJECT FROM THE TANK. |
| | SMOKE EXHAUST NOT FREE, OR WITH TERMINAL THAT OBSTRUCTS THE PASSAGE OF SMOKE<br>THE FOLLOWING ALARM IS SHOWN ON THE DISPLAY **"SMOKE NO OUT"** | CLEAN THE BRAZIER AS IN DICATED IN THIS USE AND MAINTENANCE GUIDE, THEN CHECK THE SMOKE EXHAUST AS IT COULD BE DIRTY OR BLOCKED. |
| | OUTLET TERMINAL CLOGGED BECAUSE A GRILL OR TERMINAL HAS BEEN INSERTED WHICH PREVENTS THE FREE PASSAGE OF SMOKE<br>THE FOLLOWING ALARM IS SHOWN ON THE DISPLAY **"SMOKE NO OUT"** | CLEAN THE BRAZIER AS INDICATED IN THIS USE AND MAINTENANCE GUIDE, THEN REMOVE THE TERMINAL AND REPLACE IT WITH A MORE SUITABLE ONE. |
| | A LONG GUST OF WIND HAS CAUSED THE APPLIANCE TO GO INTO SAFETY MODE.<br>THE FOLLOWING ALARM IS SHOWN ON THE DISPLAY **"SMOKE NO OUT"** | CLEAN THE BRAZIER AS DESCRIBED IN THIS USE AND MAINTENANCE GUIDE, DE-ENERGISE THE APPLIANCE THEN POWER UP AGAIN |
| | THE PELLET FEED MOTOR IS NOT WORKING<br>THE FOLLOWING ALARM IS SHOWN ON THE DISPLAY **"NO PELLET"** | REPLACE THE PELLET FEED MOTOR |
| | THE RESET THERMOSTAT TRIPS AND LOCKS THE GEARMOTOR<br>THE **"ALARM T.MAX"** ALARM IS SHOWN ON THE DISPLAY | AFTER HAVING VERIFIED AND FOUND A SOLUTION FOR THE OVERTEMPERATURE PROBLEM, WAIT UNTIL THE APPLIANCE COOLS DOWN AND RESET THE THERMOSTAT. |
| | THE DOOR OF THE COMBUSTION CHAMBER OF THE APPLIANCE IS OPEN<br>THE FOLLOWING ALARM IS SHOWN ON THE DISPLAY **"SMOKE NO OUT"** | CLOSE THE DOOR OF THE COMBUSTION CHAMBER |
| **THE APPLIANCE ACCUMULATES PELLETS IN THE BRAZIER WHILE OPERATING** | SMOKE EXHAUST NOT FREE, OR WITH TERMINAL THAT OBSTRUCTS THE PASSAGE OF SMOKE | CLEAN THE BRAZIER AS IN DICATED IN THIS USE AND MAINTENANCE GUIDE, THEN CHECK THE SMOKE EXHAUST AS IT COULD BE DIRTY OR BLOCKED OR REMOVE THE TERMINAL AND REPLACE IT WITH A MORE SUITABLE ONE. |
| | THE BRAZIER IS VERY DIRTY. | CLEAN THE BRAZIER AS INDICATED IN THIS USE AND MAINTENANCE GUIDE |
| | THE DOOR OF THE COMBUSTION CHAMBER OF THE APPLIANCE IS NOT TIGHT, THE GASKET IS WORN | CLOSE THE DOOR OF THE COMBUSTION CHAMBER FIRMLY / REPLACE THE GASKET |
| | PELLET WITH ASH DEPOSIT GREATER THAN STANDARD OR OF DUBIOUS QUALITY | CLEAN THE BRAZIER AND SET OPERATING PROGRAM **LEVEL 2,** AS INSTRUCTED IN THIS USE AND MAINTENANCE GUIDE. IF THIS DOES NOT SUFFICE, CHANGE TO A BETTER QUALITY OF PELLETS |
| **THE APPLIANCE LEAKS SMOKE INTO THE ROOM** | OCCURS THE FIRST TIME THE APPLIANCE IS SWITCHED ON AS THE SILICONE PAINT IS BEING DRIED | RUN THE APPLIANCE AT HIGH POWER LEVELS FOR A FEW DAYS |
| | THE SMOKE EXHAUST IS NOT SEALED CORRECTLY | CHECK THE TIGHTNESS OF THE FLUE OUTLET AND IN PARTICULAR THE CONDITION OF THE EXHAUST PIPES AND THE GASKETS |
| | IF THE APPLIANCE STARTS TO SMOKE AFTER 25 MINUTES: DIRTY BURNER, VERY DELAYED START | CLEAN THE BRAZIER AS INDICATED IN THIS USE AND MAINTENANCE GUIDE |
| | IF THE APPLIANCE STARTS TO SMOKE AFTER 25 MINUTES: DELAYED START BECAUSE THE SCREW FEEDER WAS EMPTY | CLEAN THE BAZIER AS INDICATED IN THIS MANUAL, THEN FILL UP THE TANK WITH PELLETS |
| | OVERPRESSURE RELIEF VALVE TRIPPING | MAKE SURE THAT ALL THE CLEANING, ROUTINE AND EXTRAORDINARY MAINTENANCE INSTRUCTIONS SET OUT IN THIS USE AND MAINTENANCE GUIDE ARE STRICTLY ADHERED TO |
| **THE APPLIANCE ENTERS ALARM MODE A FEW MINUTES AFTER THE START SEQUENCE HAS ENDED** | DELAYED START BECAUSE THE SCREW FEEDER IS EMPTY<br>THE FOLLOWING ALARM IS SHOWN ON THE DISPLAY **"FAILED START"** | CLEAN THE BRAZIER AS INDICATED IN THIS USE AND MAINTENANCE GUIDE, THEN FILL UP THE TANK WITH PELLETS |
| | START UP HAS BEEN GREATLY DELAYED BECAUSE THE BRAZIER IS DIRTY<br>THE FOLLOWING ALARM IS SHOWN ON THE DISPLAY **"FAILED START"** | CLEAN THE BRAZIER AS INDICATED IN THIS USE AND MAINTENANCE GUIDE, THEN FILL UP THE TANK WITH PELLETS |
| **THE APPLIANCE DOES NOT START UP** | THE SPARK PLUG IS NOT WORKING<br>THE FOLLOWING ALARM IS SHOWN ON THE DISPLAY **"FAILED START"** | CLEAN THE BRAZIER AS INDICATED IN THIS USE AND MAINTENANCE GUIDE, THEN REPLACE THE SPARK PLUG |
| | THE PELLET TANK OR SCREW FEEDER IS EMPTY<br>THE FOLLOWING ALARM IS SHOWN ON THE DISPLAY **"FAILED START"** | CLEAN THE BRAZIER AS INDICATED IN THIS USE AND MAINTENANCE GUIDE, THEN FILL UP THE TANK WITH PELLETS |
| | EXCESSIVE DRAUGHT IN THE FLUE OUTLET<br>THE FOLLOWING ALARM IS SHOWN ON THE DISPLAY **"FAILED START"** | HAVE THE FLUE OUTLET DRAUGHT CHECKED |
| | THE HOLE OF THE SPARK PLUG IS CLOGGED WITH COMBUSTION RESIDUES | CLEAN THE BRAZIER AS INDICATED IN THIS USE AND MAINTENANCE GUIDE |
| **THE GLASS IS COVERED IN BLACK SOOT** | THE APPLIANCE ACCUMULATES PELLETS IN THE BRAZIER | CLEAN THE BRAZIER AND SET OPERATING PROGRAM **LEVEL 2,** AS INSTRUCTED IN THIS USE AND MAINTENANCE GUIDE. IF THIS DOES NOT SUFFICE, CHANGE TO A BETTER QUALITY OF PELLETS |
| | THE APPLIANCE OPERATES WITH FREQUENT ON-OFF CYCLES | THE APPLIANCE SHOULD RUN FOR LONGER PERIODS OF TIME TO REDUCE THE ON/OFF EVENTS |
| | THE FLUE OUTLET HAS POOR DRAUGHT | HAVE THE FLUE OUTLET DRAUGHT CHECKED AND IF NECESSARY, MAKE THE APPROPRIATE MODIFICATIONS |
| | POOR QUALITY PELLETS | CLEAN THE BRAZIER AND SET OPERATING PROGRAM **LEVEL 2,** AS INSTRUCTED IN THIS USE AND MAINTENANCE GUIDE. IF THIS DOES NOT SUFFICE, CHANGE TO A BETTER QUALITY OF PELLETS |
| **THE APPLIANCE DOES NOT WARM UP** | ROOM TEMPERATURE THERMOSTAT SET TOO LOW, APPLIANCE OPERATES INTERMITTENTLY | THE APPLIANCE NEEDS TO RUN FOR MORE HOURS AT A HIGHER POWER; SET A HIGHER ROOM TEMPERATURE |
| | THE ROOM IS TOO LARGE, THE WALLS ARE COLD | THE APPLIANCE SHOULD OPERATE FOR MORE TIME AND WITH MORE POWER |
| | POOR QUALITY PELLETS | CHANGE TO AN APPROVED TYPE AS INDICATED IN THIS USE AND MAINTENANCE GUIDE |
| | CEILINGS TOO HIGH OR PRESENCE OF STAIRS THAT DISPERSE THE HEAT ELSEWHERE. | SEPARATE THE SPACES OR RUN THE APPLIANCE AT HIGHER LEVELS FOR LONGER PERIODS OF TIME |

| | | |
|---|---|---|
| **THE APPLIANCE IS OFF BUT THERE ARE UNBURNT PELLETS IN THE BRAZIER** | PELLETS HAVE RUN OUT IN THE TANK WHILE THE APPLIANCE IS RUNNING THE FOLLOWING ALARM IS SHOWN ON THE DISPLAY **"NO PELLET"** | CLEAN THE BRAZIER AS INDICATED IN THIS USE AND MAINTENANCE GUIDE, THEN FILL UP THE TANK WITH PELLETS |
| | EXCESSIVE DRAUGHT IN THE FLUE OUTLET THE FOLLOWING ALARM IS SHOWN ON THE DISPLAY **"NO PELLET"** | HAVE THE FLUE OUTLET DRAUGHT CHECKED AND IF NECESSARY, MAKE THE APPROPRIATE MODIFICATIONS |
| **THE TIME DOES NOT REMAIN IN THE MEMORY** | THE BUFFER BATTERY INSTALLED IN THE CONTROL PANEL IS EXHAUSTED | REPLACE THE BATTERY |
| **THE HOURLY PROGRAM IS NOT COMPLIED WITH** | THE USER HAS NOT ENABLED IT | PRESS THE CLOCK BUTTON TO ENABLE IT AS INSTRUCTED IN THIS USE AND MAINTENANCE GUIDE |
| | THE BUFFER BATTERY INSTALLED IN THE CONTROL PANEL IS EXHAUSTED | REPLACE THE BATTERY |
| | AN ERROR HAS BEEN MADE WITHIN THE PROGRAMMED CYCLE: A SHUT OFF TIME HAS BEEN SET BEFORE THE START TIME | VERIFY THE TIMES SET IN THE CRONO SCREEN |
| **AFTER A FEW HOURS OF OPERATION, A DEPOSIT APPEARS ON THE GLASS** | THIS PROBLEM OCCURS IN NEW PRODUCTS AND IS CAUSED BY THE EVAPORATION OF SOLVENTS PRESENT IN THE SILICONE | CLEAN THE GLASS WITH A NON-ABRASIVE WET CLOTH |

**IF THE REMEDIES SUPPLIED HERE DO NOT SOLVE THE PROBLEM YOU HAVE ENCOUNTERED, OR IF YOU REQUIRE SPARE PARTS, CONTACT AN AUTHORISED TECHNICAL SUPPORT CENTRE.**

# 13 – CONDITIONS OF WARRANTY

**POINT 1A**

Every Thermorossi product is delivered with this warranty certificate. This warranty is to be considered a conventional guarantee as defined in art. 133 of Italian Legislative Decree no. 206 dated 6 September 2005 (so-called Consumer Code) . This warranty does not in any way affect the rights expressly granted to the consumer concerning the sale of consumer goods as set forth in Italian Legislative Decree no. 206/2005. The consumer is therefore always entitled to exercise these rights with the seller, under the terms and conditions established by the aforementioned legislative decree and by this conventional guarantee.
This warranty is valid only in the case where the product is purchased for domestic uses (i.e. the subject is a consumer as defined in art. 3 paragraph 1, point A of Italian legislative decree 206/2005) and, in any case, not for business or professional purposes. Barring the cases provided for by law, it is the responsibility of the purchaser to demonstrate any product defects and should such product be found to be fully functional, the warranty will be considered inapplicable. The warranty is valid only if the product is installed, used and serviced in accordance with all the instructions provided in the use, maintenance and installation guide delivered with the product.

This warranty certificate is valid solely for the parts mentioned herein.
The warranty is valid for 24 months for the product, excluding the room fan and the components expressly indicated in point 1C herein. Thermorossi is therefore not responsible for demonstrating the full functionality of the system to which the product is connected, which remains the customer's responsibility. The warranty is subject to the limits and exclusions specified in this warranty certificate and exclusively under the conditions stated herein. In any case, for a warranty claim to be taken into consideration, the customer must report the non-conformity to the seller in writing no later than two months from the date of its identification. The warranty is null and void if this deadline is not respected. The purchaser is responsible for demonstrating that this warranty is valid; this can be done by presenting a delivery document issued by the seller or another document (receipt, till receipt or similar...) indicating the name of the seller, the product identification details (e.g. model code) and the date of the sale or delivery date if later.
Therefore, for the warranty to be valid, the above documentation must be kept by the consumer and shown when the product is being inspected/repaired. This warranty is valid solely under the following conditions:
all activities involved in installing the product and connecting it to the distribution grid must be carried out by personnel holding the necessary qualifications who must also hand over a specific declaration of conformity certifying that the work has been carried out in accordance with best practice, in full compliance with the instructions provided in the use, maintenance and installation guide delivered with the product and the regulations regarding systems and safety.
all operations involving the use of the product, as well as periodic maintenance, must be carried out according to the instructions and indications provided in the use, maintenance and installation guide delivered with the product.
all repairs to the product must be carried out by personnel of Thermorossi S.p.A. authorised service centres;
only original Thermorossi spare parts, accessories and consumables must be used.
The warranty period for the room fan (if supplied) is 48 months from the date of delivery, without prejudice to the limits and exclusions specified in this warranty certificate and solely under the conditions set out herein.
The room fan warranty is null and void if the product has not been installed by a qualified technician who has checked that all the characteristics of the system are suitable. Such characteristics must comply with the legislation on safety and systems. The room fan warranty is null and void if the filter has not been maintained and cleaned as established in the use and maintenance guide supplied with the appliance. The room fan warranty does not cover damage caused by dirt, dust or any other substance/element that deposits on the impeller. The room fan warranty does not cover damage caused by the power supply. The room fan warranty is null and void in the event of total or partial blockage of the fan due to overheating caused by incorrect maintenance by the customer and/or user (see the instruction manual). The room fan warranty is null and void if the ventilation grille supplied is missing (see the instruction manual). Fan cleaning and inspection are excluded from this warranty.

**POINT 1B**

Components damaged by causes and/or events external to the product are excluded from this warranty.

The warranty does not cover damage caused by: excessive or insufficient flue outlet draught compared to the defined value, lack of maintenance, failure to clean the appliance, atmospheric and chemical agents, corrosion of any type and/or nature, power overloads and surges, fire, cleaning, tampering with the product, parts damaged due to overheating caused by poor maintenance, components worn due to the use of non-approved pellets, impact and/or other causes not related to the product.

**POINT 1C**
The following components are excluded from the warranty: ceramic door glass, screen printing on the door glass, majolica tile parts, refractory materials, painted or galvanised parts, enamelled parts, gaskets, knobs and consumables in general, with the exception of the lighting heater, which is covered by a 6-month warranty only if it is not warped. Warranty replacement does not imply any resetting of the conventional guarantee or its extension. Colour variations on the majolica tiles and the presence of crazing or spotting are not a reason for claims because they are natural characteristics of the materials themselves. Parts found to be defective due to negligence or careless use, damage during transport, incorrect maintenance, or incorrect installation, are not covered by the warranty.

**POINT 2A**
The technical assistance centre will take appropriate action as soon as possible in the event of failure of the product to function. In this regard, no compensation shall be due for damage or problems following forced inactivity of the product. Repairs or replacements carried out under this conventional guarantee do not imply any resetting of the conventional guarantee or its extension. Thermorossi will repair the product if possible and this is not too costly for the company. The product will only be replaced if it is objectively impossible to repair it and its replacement is not too costly. The product will not be replaced if external factors cause alarms or evident malfunctions. For the purposes of this conventional guarantee, replacement of the product shall be considered too costly if it entails unreasonable expenses compared to its repair, taking into account the estimated value of the product without the defect, the seriousness of the non-conformity and the possibility of repairs being carried out without significantly inconveniencing the consumer.

If technical assistance is provided by the personnel of the technical assistance centres at the customer's request, and such assistance is provided outside the warranty (e.g. because the warranty is not valid, because the customer has not sent the warranty certificate in the set times, or because the part is excluded from this warranty), the costs of such assistance will be charged in full to the customer. These costs include:
Call-out fee, the cost of labour and any parts to be replaced. These costs will be of a reasonable amount and the customer can ask the assistance centre for an indication of the amounts in advance. In any case, it should be noted that requests for assistance “under warranty” which, based on the report and analysis carried out by the assistance centre, are the result of tampering, negligence or non-compliant installation, lack of cleaning or in any case not falling within the scope of this conventional guarantee, will entail:
Call-out fee, the cost of labour and any parts to be replaced. These costs will be of a reasonable amount and the customer can ask the assistance centre for an indication of the amounts in advance.

**POINT 2B**
Thermorossi S.p.A. declines liability for any damage directly or indirectly caused to persons, animals or property, due to or related to installation that does not comply in full with current regulations and/or installation, use and maintenance that does not comply in full with all the instructions contained in the installation, use and maintenance guide delivered with the product.

Code 70030746 Rev. E 12/2025

THERMOROSSI

*Fire Lovers*

**THERMOROSSI S.p.A.**
Via Grumolo, 4 (Z.I.) 36011 Arsiero (VI) - ITALY
Fax 0445.741657 - www.thermorossi.com - info@thermorossi.it