

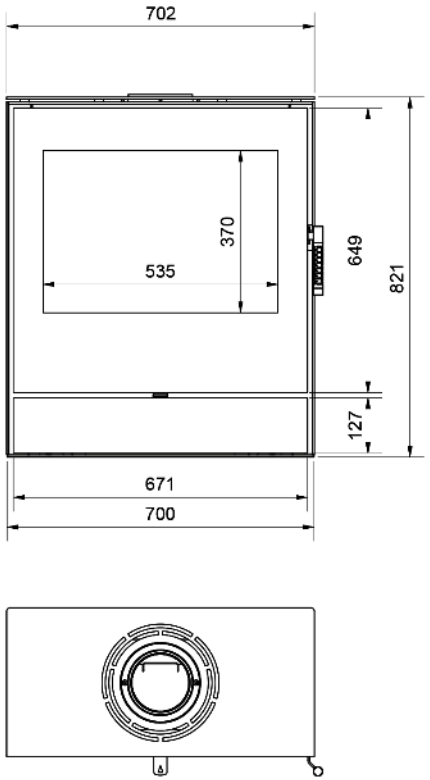

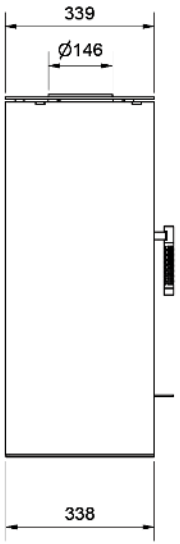

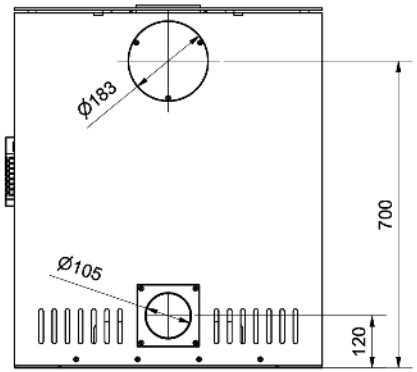

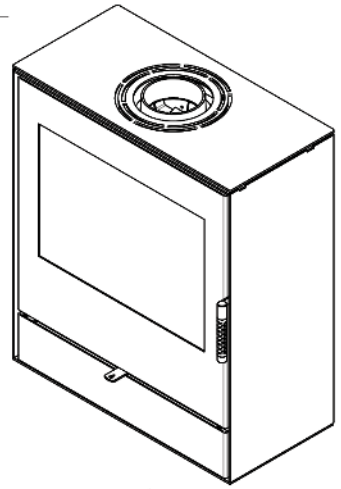

KRATKI ROLLO SQUARED 2

WWW.KRATKI.CO.ZA
KRATKI SOUTH AFRICA