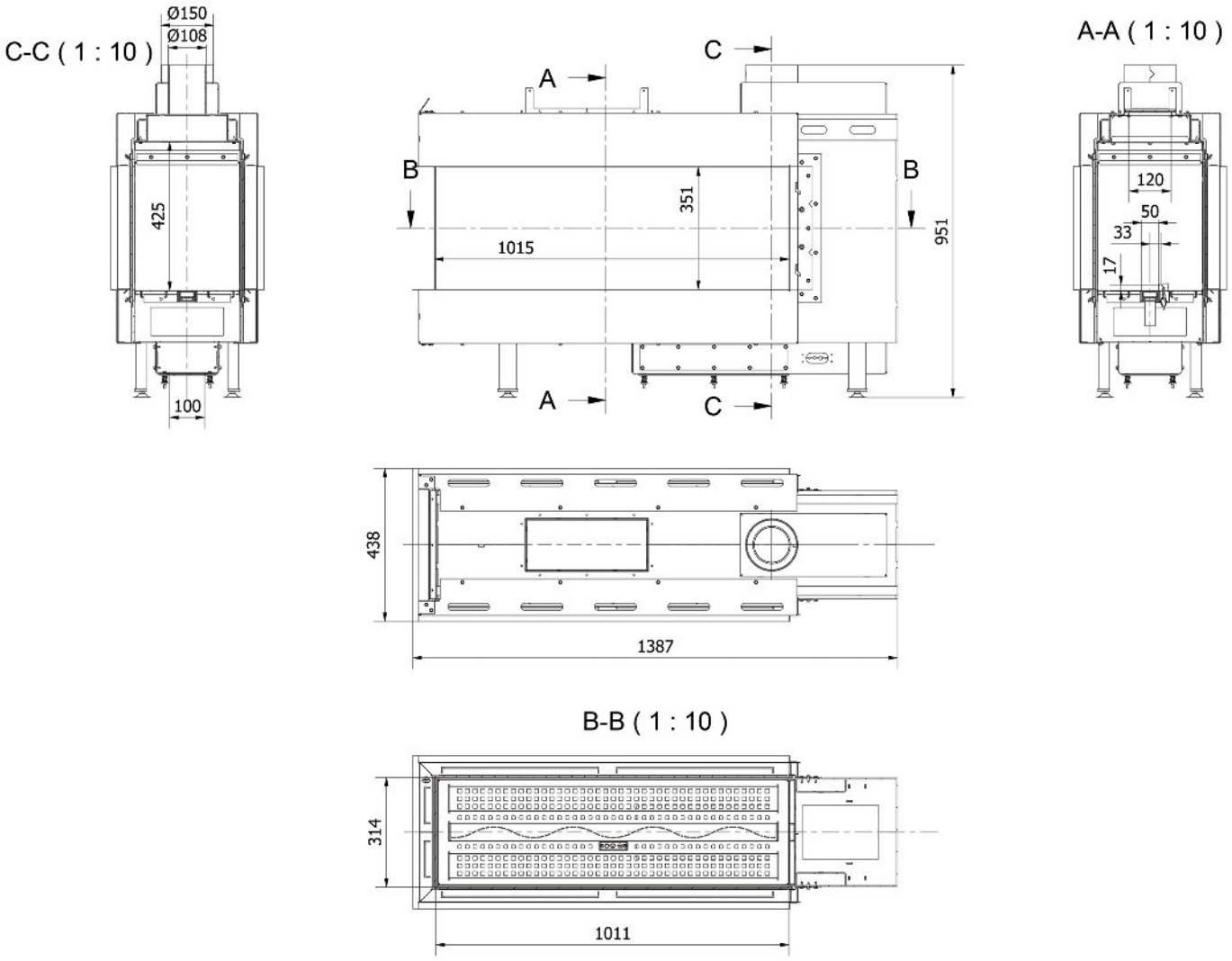

KRATKI LEO 100 TUNNEL LP

WWW.KRATKI.CO.ZA

KRATKI SOUTH AFRICA