KRATKI MB120 G

WOOD BURNING | BUILT-IN | 31 KW UNIT

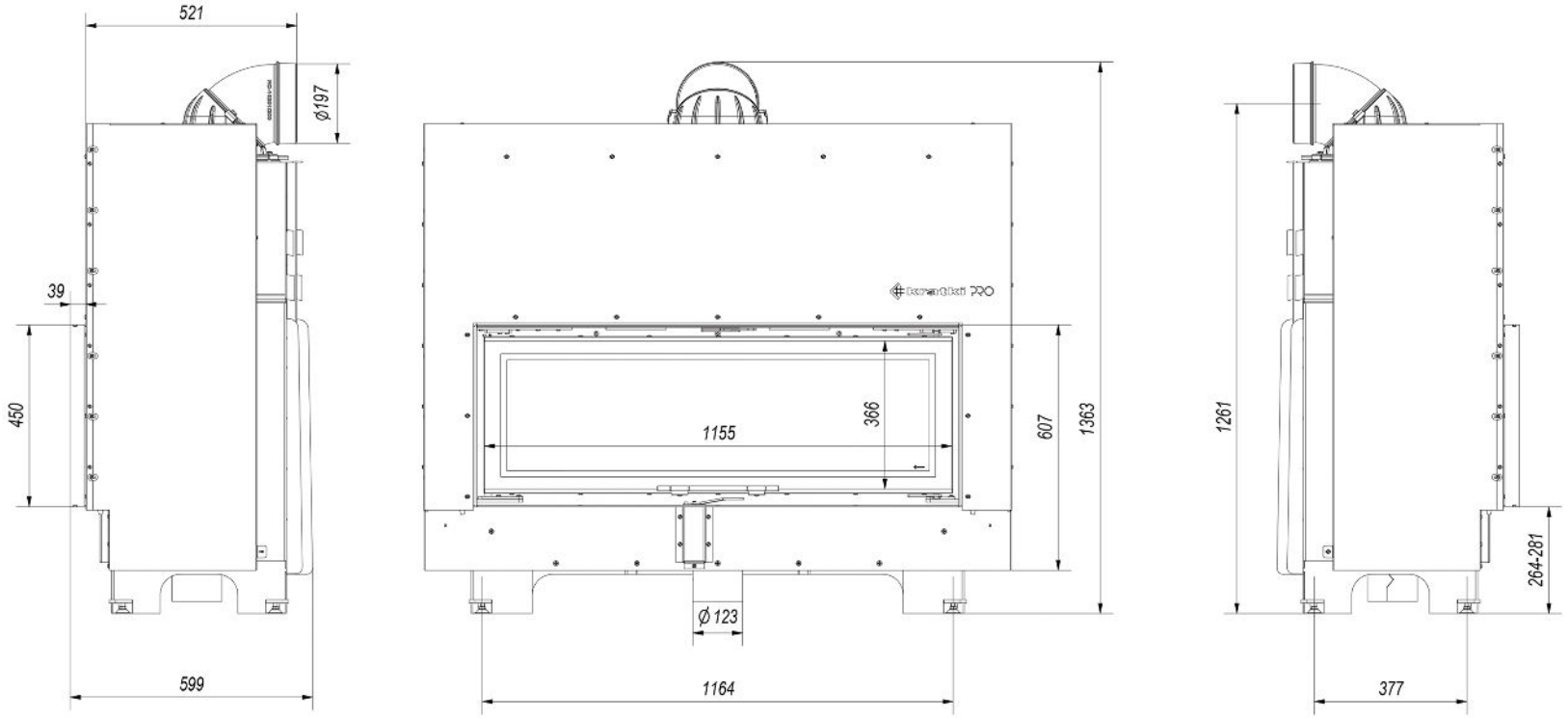

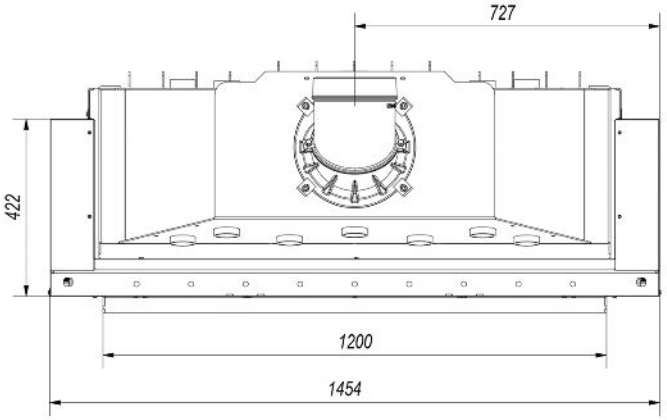

kratki
South Africa