charnwood

ISLAND III *blu*



RATED OUTPUT

12kW to room (range **8-16kW**)

NET EFFICIENCY

79%

FLUE OUTLET

Top or Rear **178mm (7")** dia

MAX LOG LENGTH

550 mm (21.5")

MIN DISTANCE TO COMBUSTIBLES

Side: **600mm** Rear: **600mm** With panels / heatshield - Side: **335mm** Rear: **335mm**

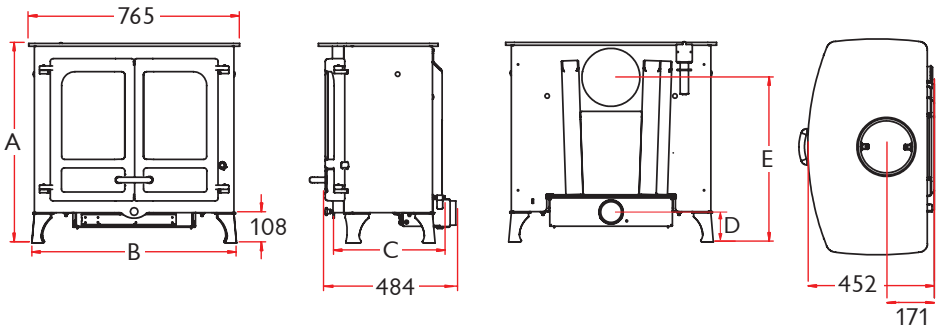

The Charnwood Island III is the largest stove in the Island collection. Its majestic proportions make it ideal for larger rooms and open plan areas. Exuding a rated 12kW of heat, this is a stove that can take an incredible log length of over half a metre. The Island III offers a spectacular view of the fire. A true wide-screen experience. Optional convection panels are also available. This model is SIA Ecodesign ready (blu).

		A	B	C	D	E	WEIGHT
LOW LEGS		**713**	**732**	**400**	**107**	**588**	**180KG**
HIGH LEGS		**795**	**750**	**400**	**189**	**670**	**184KG**
STORE STAND		**945**	**714**	**309**	**339**	**820**	**197KG**