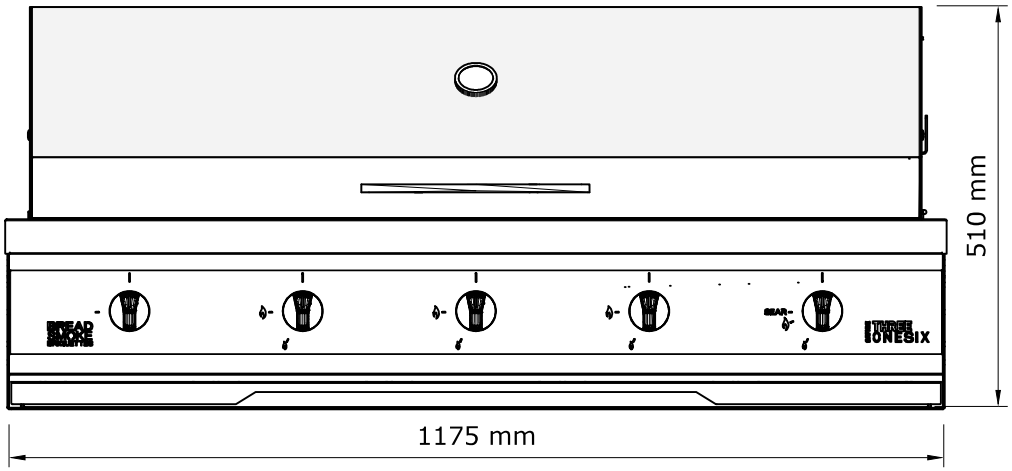

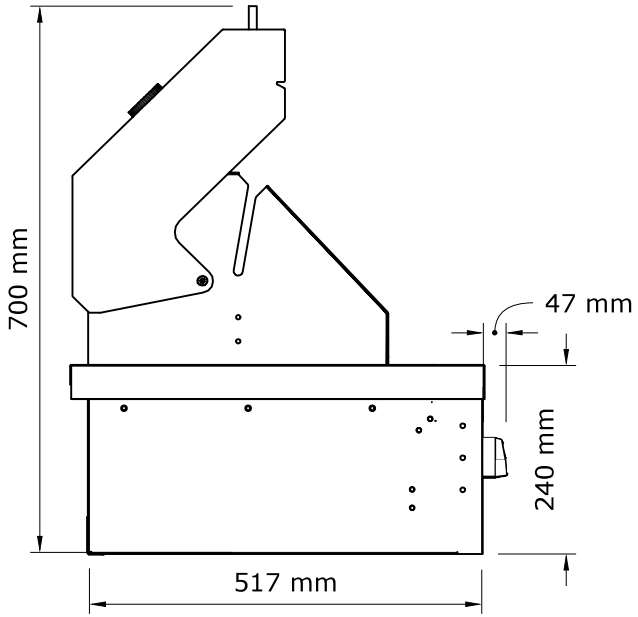

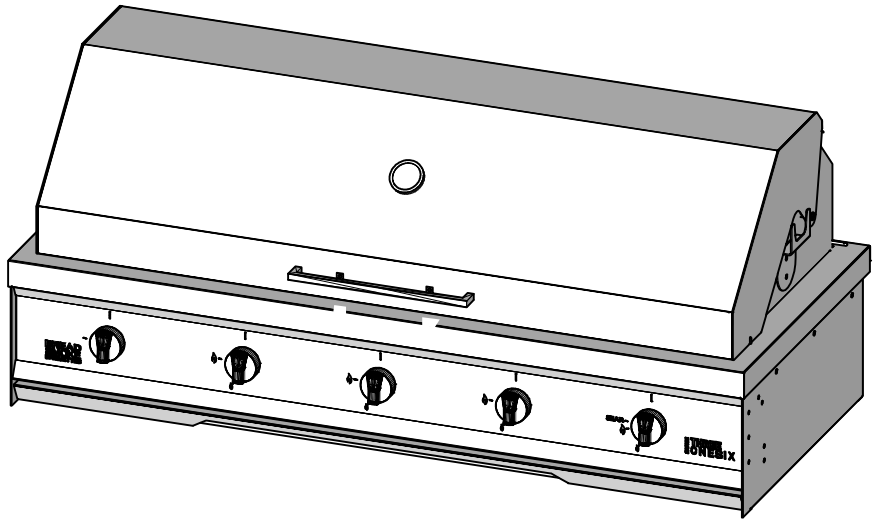

1170 ThreeOneSix

© This drawing is copyright and remains the property of SAFIRE . It may not be retained, copied or used without written consent.