FORNO MINI

55016	-	cm - -	kg 210	-	72x72 H.90	54	48



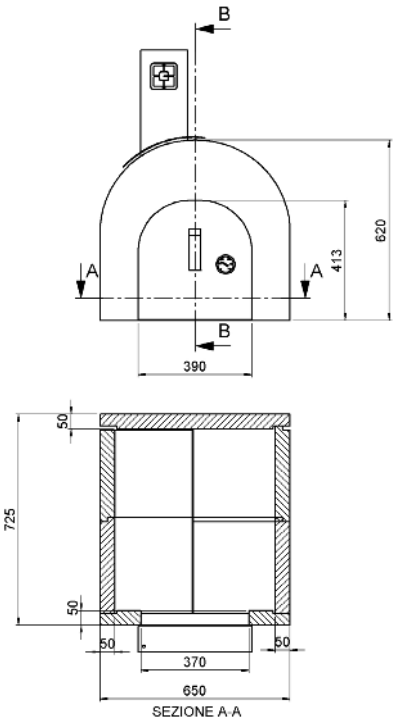

Oven made of refractory material, high alumina content. Equipped with metal door and thermometer.

Wood and charcoal burning

COMPONENTS

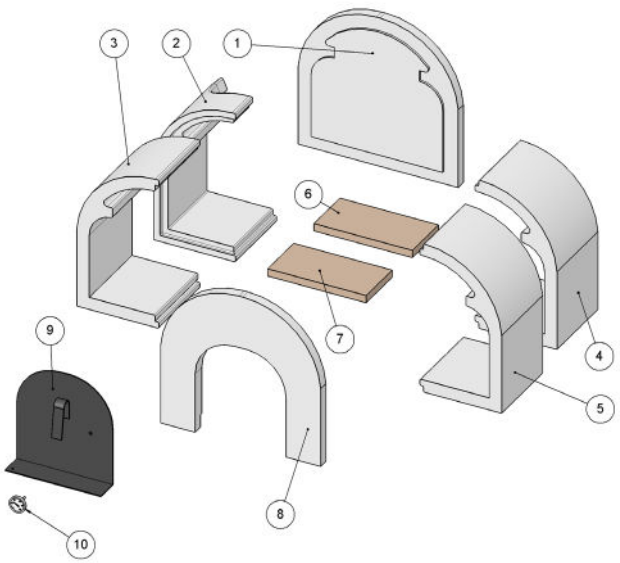

NR.	DESCRIPTION	CODE
1	BACKSIDE	25022
2	LEFT BACK COVER	25023
3	LEFT FRONT COVER	25024
4	RIGHT BACK COVER	25019
5	RIGHT FRONT COVER	25020
6/7	HOLLOW FLAT TILE	25018
8	OVEN FRONT	25021
9/10	DOOR WITH THERMOMETER	140100