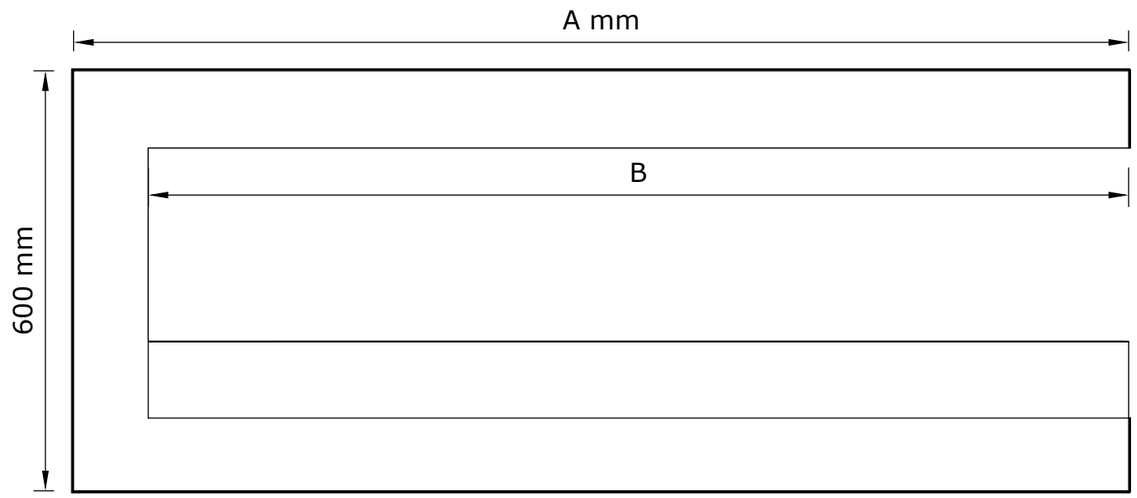

Front View

A	B	C	Cutout	Heat m3
1200	1110	1105	980 x 200	300
1700	1610	1605	1380 x 200	400

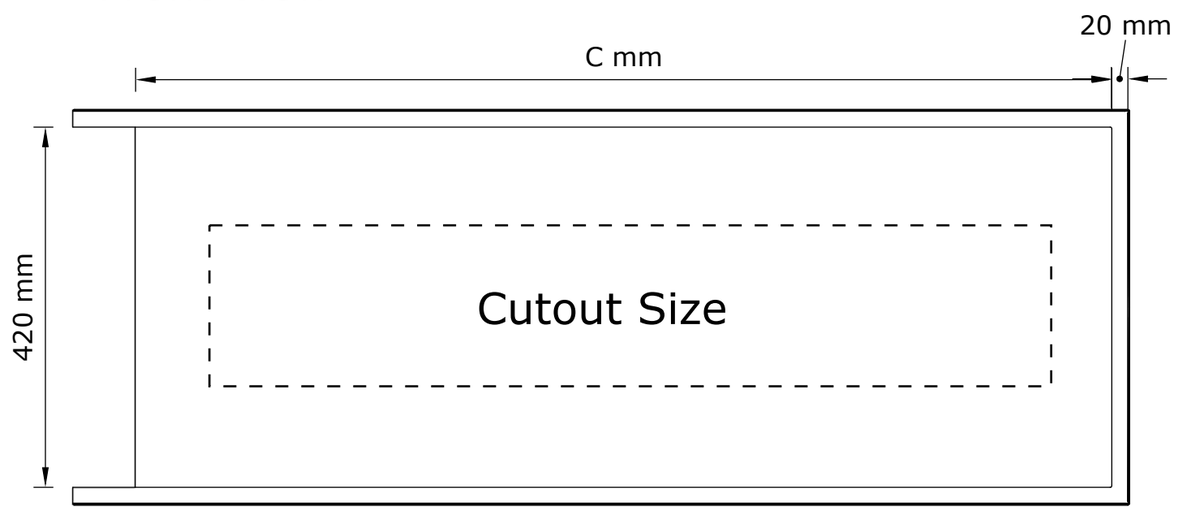

Top View

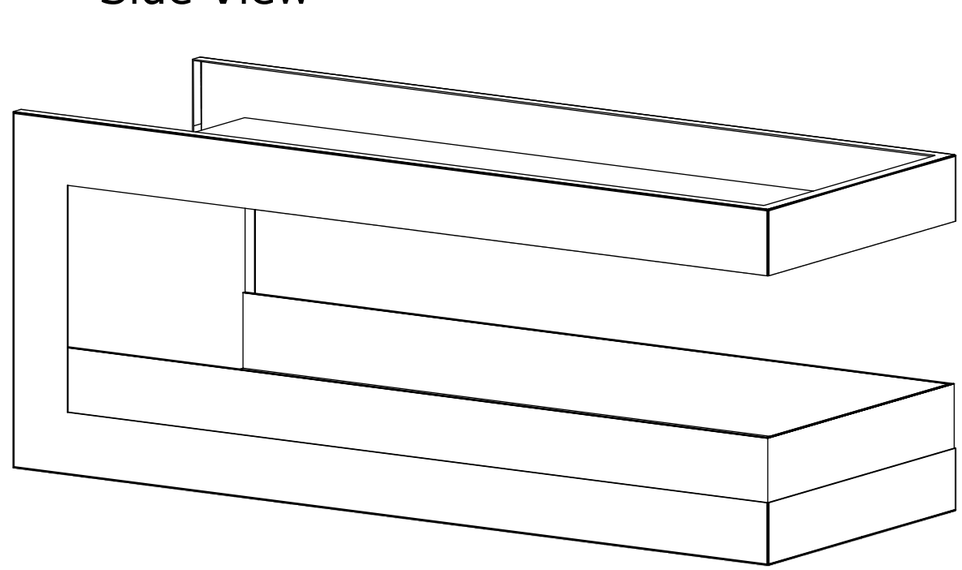

3D View

Canto Three

© This drawing is copyright and remains the property of SAfire . It may not be retained, copied or used without written consent.