Building prep work for Kratki JAS

For the building prep work – (note these dimensions are suitable if you are using the convection box and frame).

1. The opening in wall required for this JAS fireplace should be exactly

   760mm wide

   570mm high

With this exact size opening the fireplace + convection box will slot into the opening and the frame will cover the small gap between the fireplace and brickwork.

2. The depth of the cavity should be **minimum 410mm deep**.

Below image – "45-degree bends avoid lintels" If the wall on front face of fireplace is a double brick wall then the inside lintel should be set at least 400mm higher to allow space for 45-degree bends.

The chimney cavity space running vertically around the flue pipe should preferably allow at least 180 x 180mm space for the flue pipes.

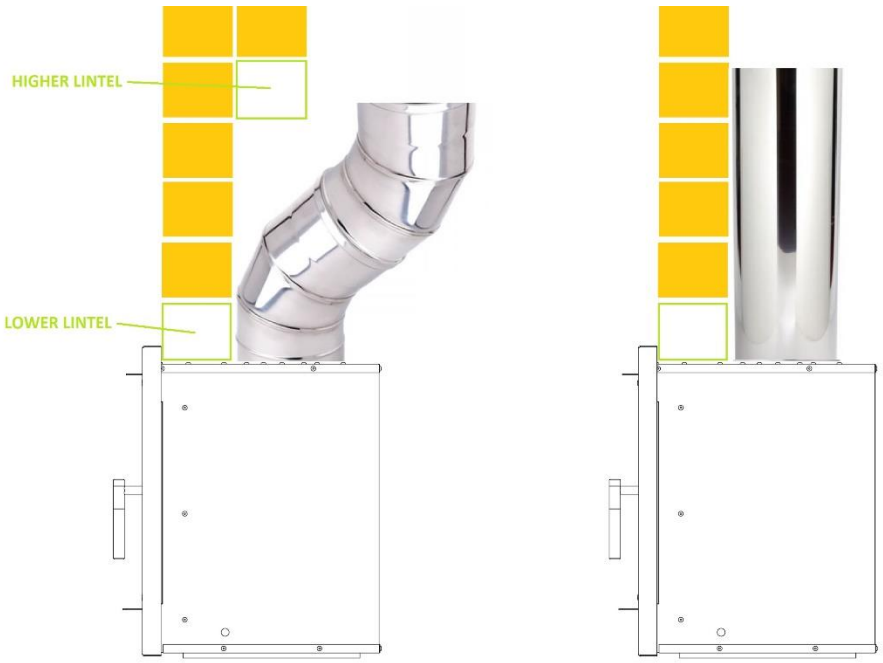

IF THE WALL IN FRONT OF FIREPLACE IS A DOUBLE BRICK WALL THEN ENSURE THAT THE INNER WALL HAS A LINTEL STARTING HIGHER UP TO ALLOW SPACE FOR FLUE PIPE 45 DEGREE BENDS

Kratki JAS

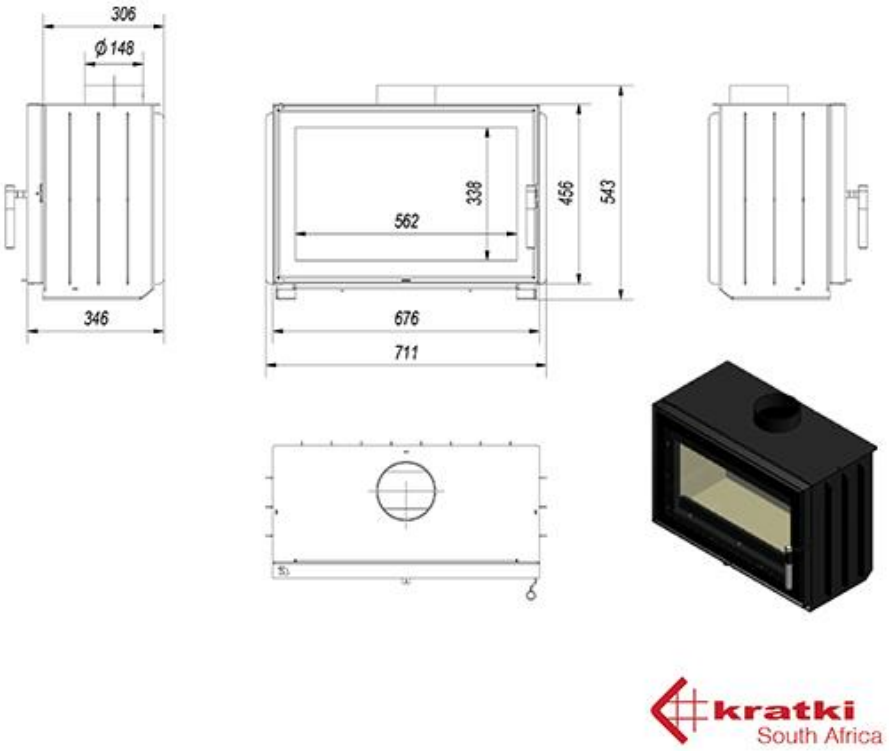

kratki
South Africa

<u>Addition Convection box and frame</u>

Convection Galvanised box is 730w x 380d x 550h

Four-sided metal frame is 810w x 630h



